THYRO-PX SERIES

DIGITAL THYRISTOR SCR POWER CONTROLLER UP TO 5000 AMPS



The Thyro-PX® series are modular, easy-to-use premier performance SCR power controllers for heating elements, resistive loads and transformer loads, in heating, melting, drying, and forming applications.

PRODUCT HIGHLIGHTS

- Comprehensive operating and control modes to minimize harmonic distortion and utility costs
- High-efficiency, wear-free design with integrated soft starting for usage with downstream transformers
- Premier performance control accuracy to maximize end-process repeatability
- Multi-zone capability that independently controls multiple single-phase loads from a single controller
- Wide communication protocol flexibility for simple integration into Rockwell™ PAC via certified AOP
- Wide performance range with rated currents up to 5000 A and rated voltages up to 1000 V
- Intuitive performance and status feedback via a modular, integrated touch screen display or PC tool

TYPICAL APPLICATIONS

- Transformer loads, resistive loads, and heating elements in electric furnaces used for glass, metals, and ceramics manufacture
- Heat tracing for piping and process elements in chemical, petro-chemical, and oil processing
- Extruder and plastic press heating, IR drying, and automotive applications

AT A GLANCE

Phase Type

1, 2, and 3-phase power controller

Accuracy

±0.5% voltage or current
±1% power

AC Input Line Voltage Rating

230 to 500 V [-20 to +10%]
500 V to 1000 V [-20 to +10%]

Type Current Range

16 to 5000 A

Control Modes

Zero cross firing (TAKT)
Phase-angle firing (VAR)
Voltage sequence control (VSC)
Soft start, soft down

Communications

Ethernet/IP®, EtherCAT®
PROFIBUS®, PROFINET®
Modbus TCP/IP®

©2026 Advanced Energy Industries, Inc.

PRODUCT SPECIFICATIONS

THYRO-PX Model		
Thyro-PX 1PX	**Thyro-PX 2PX**	**Thyro-PX 3PX**
One-phase power controller	Two-phase power controller for three-phase economic circuit	Three-phase power controller
Full wave switch (TAKT)	Full wave switch (TAKT)	Full wave switch (TAKT)
Phase-angle firing (VAR)	—	Phase-angle firing (VAR)

THYRO-PX Series	
Control Accuracy	±0.5% voltage or current, ±1% power
Load Types	Resistive loads, transformer loads, and loads with large Rwarm/Rcold up to factor 20 (MOSI starting mode)
Operating Modes	TAKT: full frequency package control
	VAR: phase-angle firing
	VSC_VAR: voltage sequence control with phase-angle firing
Control Types	U-voltage, U^2-voltage, I-current, I^2-current, P-power, without regulation
Set Point Input	Up to 3 analog inputs (freely configurable), control start/finish can be set as desired between 0 (4) to 20 mA; 0 (1) to 10 (2)V.
Actual Value Outputs	3 measuring values for optional display of U, I, and P; can be set as desired between 0 to 20 mA; 0 to 10 V
Load Circuit/Self-Monitoring	Provided
Operation/Fault Indicators	Via 3 fault signaling relays and status/diagnostic LEDs, freely configurable
Fuse	Integrated semiconductor fuse

ELECTRICAL SPECIFICATIONS

AC Input Line Voltage	Type voltage 500 V units: 184 V to 550 V
	Type voltage 690 V units: 400 V to 759 V
	Type voltage 1000 V units: 580 V to 1100 V
Frequency	All types, 45 to 65 Hz
Control Voltage	AC min 90 to max 265 V; alternative DC 24 V (±10%)
Ventilator (HF Types Only)	230 V, 50 to 60 Hz; optional 115 VAC, 50 to 60 Hz

Environmental	
Ambient Temperature	Up to 35°C (95°F) by external fan cooling (for HF types, with integrated fan) with rated current
	Up to 45°C (113°F) by passive convection cooling with rated current
	At higher temperatures, operation is permissible with reduced current limits.
	Max 40°C (104°F) for UL applications
Storage Temperature	-25 to +55°C (-13 to 131°F)
Humidity Class	DIN EN 50178 Tab. 7
Site Altitude	Up to 1000 m (3281 ft) above sea level at nominal load; above 1000 m (3281 ft), on request

Regulatory	
Certifications	CE marked for EU LV Directive 2014/35/EU and 2004/108/EC
	UL Certified, UL 508 (100 kVA short circuit test) UL Listed: Up to 500 V at up to 280 A. Up to 690 V at 80 A and 200 A UL Recognized: Up to 500 V at 350 A, 495 A, 650 A. Up to 690 V at 300 A

MECHANICAL SPECIFICATIONS

Thyro-PX 1PX, 500 V Type Voltage

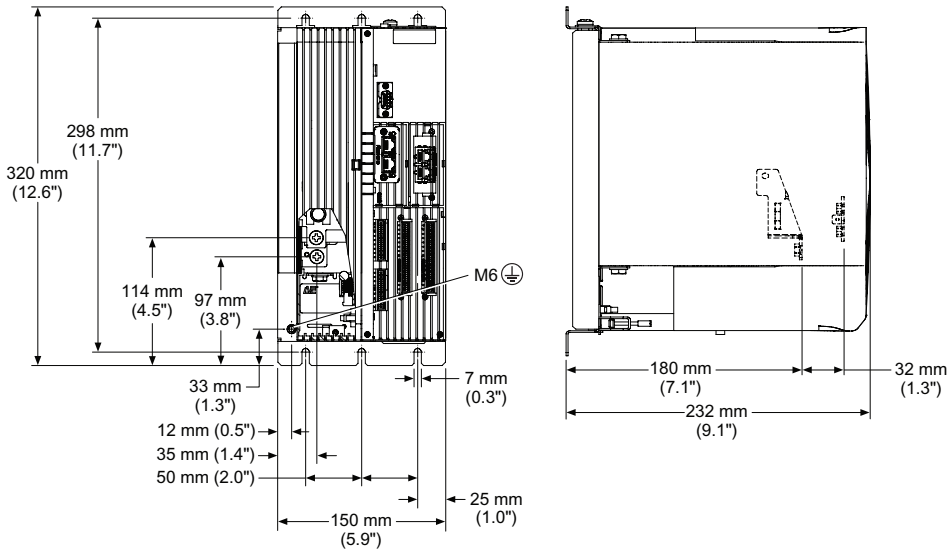

Design may change when using a fan and/or rated current > 350 A

Dimensions								
Type Current (A)	Width		Height		Depth		Weight	
	mm	in	mm	in	mm	in	kg	lb
16	150	5.9	320	12.6	232	9.1	6	13.2
37	150	5.9	320	12.6	232	9.1	6	13.2
75	150	5.9	320	12.6	232	9.1	6	13.2
110	150	5.9	320	12.6	232	9.1	6	13.2
130	200	7.9	320	12.6	232	9.1	8	17.6
170	200	7.9	320	12.6	232	9.1	8	17.6
280	200	7.9	370	14.6	232	9.1	9	19.8
350	175	6.9	501	19.7	340	13.4	15	33.1
495	175	6.9	501	19.7	340	13.4	15	33.1
650	175	6.9	501	19.7	340	13.4	15	33.0
780	242	9.5	787	31	505	19.9	35	77.2
1000	242	9.5	787	31	505	19.9	35	77.2
1500	242	9.5	787	31	505	19.9	35	77.2
2100	522	20.5	577	22.7	445	17.5	50	110.2
2900	593	23.3	577	22.7	473	18.6	62	136.7
5000[1]	593	23.3	837	33.0	474	18.6	107	235.9

MECHANICAL SPECIFICATIONS (CONTINUED)

Thyro-PX 2PX, 500 V Type Voltage

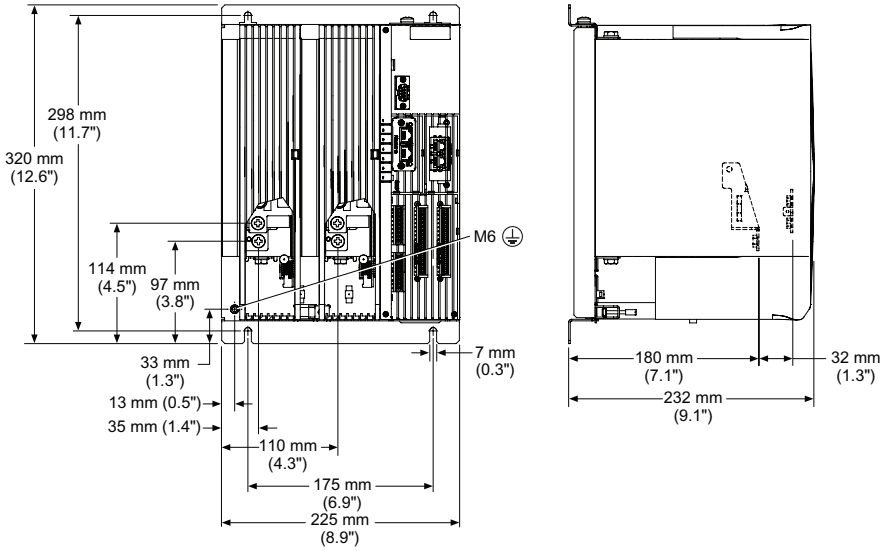

Design may change when using a fan and/or rated current > 350 A

Dimensions								
Type Current (A)	Width		Height		Depth		Weight	
	mm	in	mm	in	mm	in	kg	lb
16	225	8.9	320	12.6	232	9.1	10	22.0
37	225	8.9	320	12.6	232	9.1	10	22.0
75	225	8.9	320	12.6	232	9.1	10	22.0
110	225	8.9	320	12.6	232	9.1	10	22.0
130	325	12.8	320	12.6	232	9.1	12	26.5
170	325	12.8	320	12.6	232	9.1	12	26.5
280	325	12.8	415	16.3	232	9.1	15	33.1
350	261	10.3	501	19.7	340	13.4	22	48.5
495	261	10.3	501	19.7	340	13.4	22	48.5
650	261	10.3	501	19.7	340	13.4	22	48.5
780	410	16.1	787	31.0	505	19.9	54	119.0
1000	410	16.1	787	31.0	505	19.9	54	119.0
1500	410	16.1	787	31.0	505	19.9	54	119.0
2100	550	21.7	837	33.0	445	17.5	84	185.2
2750	593	23.3	837	33.0	474	18.7	107	235.9

MECHANICAL SPECIFICATIONS (CONTINUED)

Thyro-PX 3PX, 500 V Type Voltage

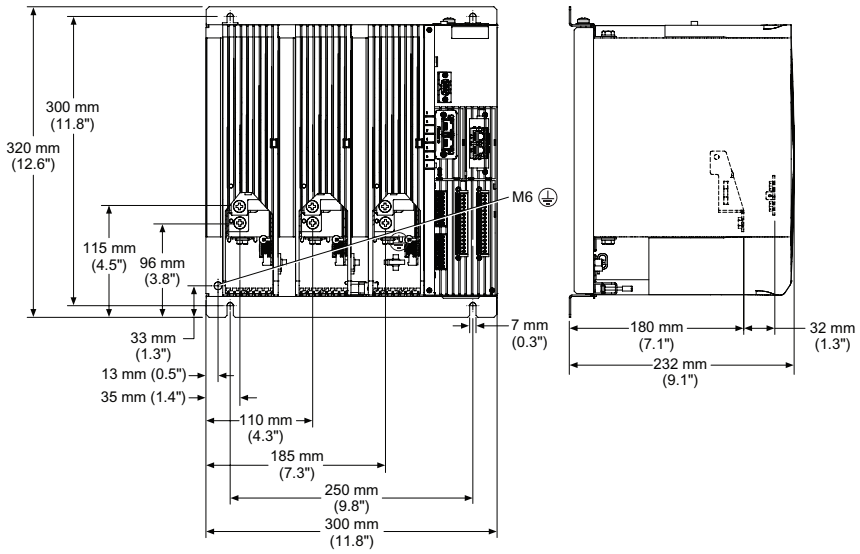

Design may change when using a fan and/or rated current > 350 A

Dimensions								
Type Current (A)	Width		Height		Depth		Weight	
	mm	in	mm	in	mm	in	kg	lb
16	300	11.8	320	12.6	232	9.1	14	30.9
37	300	11.8	320	12.6	232	9.1	14	30.9
75	300	11.8	320	12.6	232	9.1	14	30.9
110	300	11.8	320	12.6	232	9.1	14	30.9
130	450	17.7	320	12.6	232	9.1	17	37.5
170	450	17.7	320	12.6	232	9.1	17	37.5
280	450	17.7	414	16.3	232	9.1	20	44.1
350	348	13.7	525	20.7	340	13.4	30	66.1
495	348	13.7	525	20.7	340	13.4	30	66.1
650	348	13.7	525	20.7	340	13.4	30	66.1
780	575	22.6	787	31.0	505	19.9	74	163.1
1000	575	22.6	787	31.0	505	19.9	74	163.1
1500	575	22.6	787	31.0	505	19.9	74	163.1
1850	550	21.7	1094	43.1	445	17.5	119	262.3
2600	593	23.3	1094	43.1	474	18.7	152	335.1

MECHANICAL SPECIFICATIONS (CONTINUED)

Thyro-PX 1PX, 690 V Type Voltage

Dimensions								
Type Current (A)	Width		Height		Depth		Weight	
	mm	in	mm	in	mm	in	kg	lb
80	200	7.9	320	12.6	232	9.1	8	17.6
200	200	7.9	370	14.6	232	9.1	9	19.8
300	175	6.9	501	19.7	340	13.4	15	33.1
500	175	6.9	501	19.7	340	13.4	15	33.1
600	175	6.9	501	19.7	340	13.4	15	33.1
780	242	9.5	787	31.0	505	19.9	35	77.2
1400	242	9.5	787	31.0	505	19.9	35	77.2
2000	522	20.6	577	22.7	445	17.5	50	110.2
2600	593	23.3	577	22.7	473	18.6	62	136.7
4500[1]	593	23.3	837	33.0	474	18.6	107	235.9

Thyro-PX 2PX, 690 V Type Voltage

Dimensions								
Type Current (A)	Width		Height		Depth		Weight	
	mm	in	mm	in	mm	in	kg	lb
80	325	12.8	320	12.6	232	9.1	12	26.5
200	325	12.8	415	16.3	232	9.1	15	33.1
300	261	10.3	501	19.7	340	13.4	22	48.5
500	261	10.3	501	19.7	340	13.4	22	48.5
600	261	10.3	501	19.7	340	13.4	22	48.5
780	410	16.1	787	31.0	505	19.9	54	119.0
1400	410	16.1	787	31.0	505	19.9	54	119.0
1850	550	21.7	837	33.0	445	17.5	84	185.2
2400	593	23.3	837	33.0	474	18.7	107	235.9

Thyro-PX 3PX, 690 V Type Voltage

Dimensions								
Type Current (A)	Width		Height		Depth		Weight	
	mm	in	mm	in	mm	in	kg	lb
80	450	17.7	320	12.6	232	9.1	17	37.5
200	450	17.7	414	16.3	232	9.1	20	44.1
300	348	13.7	525	20.7	340	13.4	30	66.1
500	348	13.7	525	20.7	340	13.4	30	66.1
600	348	13.7	525	20.7	340	13.4	30	66.1
780	575	22.6	787	31.0	505	19.9	74	163.1
1400	575	22.6	787	31.0	505	19.9	74	163.1
2000	550	21.7	1094	43.1	445	17.5	119	262.3
2200	593	23.3	1094	43.1	474	18.7	152	335.1

MECHANICAL SPECIFICATIONS (CONTINUED)

Thyro-PX 1PX, 1000 V Type Voltage

Dimensions								
Type Current (A)	Width		Height		Depth		Weight	
	mm	in	mm	in	mm	in	kg	lb
600[1]	242	9.5	787	31.0	505	19.9	35	77.2
900	242	9.5	787	31.0	505	19.9	35	77.2

Thyro-PX 2PX, 1000 V Type Voltage

Dimensions								
Type Current (A)	Width		Height		Depth		Weight	
	mm	in	mm	in	mm	in	kg	lb
600[1]	410	16.1	787	31.0	505	19.9	54	119.0
900	410	16.1	787	31.0	505	19.9	54	119.0

Thyro-PX 3PX, 1000 V Type Voltage

Dimensions								
Type Current (A)	Width		Height		Depth		Weight	
	mm	in	mm	in	mm	in	kg	lb
600[1]	575	22.6	787	31.0	505	19.9	74	163.1
900	575	22.6	787	31.0	505	19.9	74	163.1

INTERFACE

Status LEDs [Programmable]	Multiple color status LEDs for parameters:
	ON/READY
	LIMIT
	PULSE LOCK
	FAULT
	POWER CONTROLLER 1 STATUS
	POWER CONTROLLER 2 STATUS
	POWER CONTROLLER 3 STATUS
Control Interface	RS-232 for Thyro-Tool Pro PC software connection or optional Thyro-Touch display
	Micro USB connector for Thyro-Tool Pro PC software connection
	9-pin digital I/O connector (6 digital inputs)
	9-pin analog I/O connector (3 analog inputs, 3 analog outputs)
Communication Modules	1 module slot for supported Anybus® digital communication protocols
dASM Interface Card	Digital and dynamic working mains load optimization

STANDARD OPTIONS

Options	
Anybus Digital Interface Card	Ethernet/IP®, EtherCAT® PROFIBUS®, PROFINET®, Modbus TCP/IP®
Thyro-Touch Modular Display	Multi-color multi-language, touch screen display, and menus for Thyro-PX configuration with integrated SD memory card and process data recorder
Thyro-Tool Pro PC Software	PC software for commissioning, visualization, configuration, and trending

Thyro-Touch Modular Display

With an integrated process data recorder, the optional Thyro-Touch unit enables intuitive operation of Thyro-PX power controllers via touch display.

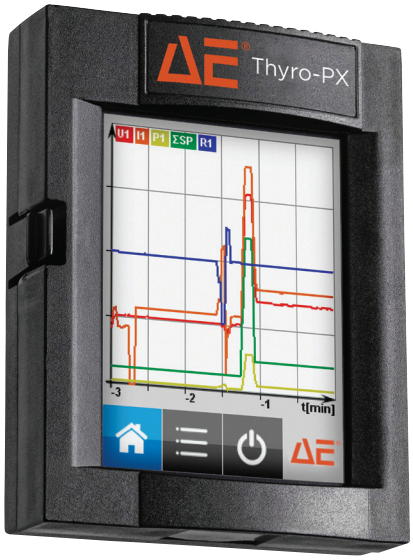

Features	
Large 2.8” touch display for menu-driven operation	
Multiple display modes	Bar chart
	Line chart
	Actual values (numerical)
	Data logger
Integrated SD card to load or save data	
Long-term data recording of up to 6 process parameters, as well as status messages	
Analysis via Thyro-Touch tool (on PC):	Long-term line-chart data
	Status messages
	PDF export
EasyStart feature for easy Thyro-PX commissioning	
Integrated low-energy Bluetooth® feature	
Retrofits into existing Thyro-PX standard units (downward compatible to LBA-2 and LBA with limited parameter settings)	
English, German, and additional languages upon request	

ACCESSORIES

Cabinet Installation Kit (SEK)	Enables cabinet door or panel installation
	Can be used with all Thyro-Touch and LBA-2 adapters

ORDERING INFORMATION

Model	Description
Thyro-PX	Modular Digital Thyristor SCR Power Controller with current range to 2900 A, ±0.5% Voltage or Current Accuracy

Code	Phase Type
1PX	Single phase power controller for single phase operation
2PX	Two phase power controller for three phase economic circuits or 2 single phase loads (multi-zone mode)
3 PX	Three phase power controller for three phase operation or 3 single phase loads (multi-zone mode)

Code	AC Input Line Voltage
500	Type Voltage 500 V unit: 230 V -20% to +10% [184 V to 550 V]
690	Type Voltage 690 V units: 500 V -20% to +10% [400 V to 759 V]

Code	Type Current, TC	Apparent Power [kVA]		
Available with all Phase type option codes and 500 V Type /Voltage		1PX	2PX	3PX
16	TC = 16 A	8	14	14
37	TC = 37 A	18	32	32
75	TC = 75 A	38	65	65
110	TC = 110 A	55	95	95
130	TC = 130 A	65	112	112
170	TC = 170 A	85	147	147
280	TC = 280 A	140	242	242
350	TC = 350 A	175	303	303
495	TC = 495 A	248	429	429
650	TC = 650 A	325	563	563
780	TC = 780 A	390	675	675
1000	TC = 1000 A	500	866	866
1500	TC = 1500 A	750	1300	1300
Available only with Phase Type Option 1PX and 500 V Type Voltage				
2100	TC = 2100 A	1050		
2900	TC = 2900 A	1450		
5000[1]	TC = 5000 A	2500		
Available only with Phase Type Option 2 PX and 500 V Type Voltage				
2000	TC = 2000 A		1732	
2750	TC = 2750 A		2381	
Available only with Phase Type Option 3 PX and 500 V Type Voltage				
1850	TC = 1850 A			1602
2600	TC = 2600 A			2251

ORDERING INFORMATION (CONTINUED)

Code	Type Current, TC	Apparent Power [kVA]		
Available with all Phase Type Option Codes and 690 V Type Voltage				
80	TC = 80 A	55	95	95
200	TC = 200 A	138	239	239
300	TC = 300 A	207	358	358
500	TC = 500 A	345	597	597
600	TC = 600 A	414	716	716
780	TC = 780 A	538	932	932
1400	TC = 1400 A	966	1673	1673
Available Only with Phase Type Option 1 PX and 690 V Type Voltage				
2000	TC = 2000 A	1380		
2600	TC = 2600 A	1794		
4500[1]	TC = 4500 A	3105		
Available Only with Phase Type Option 2 PX and 690 V Type Voltage				
1850	TC = 1850 A		2210	
2400	TC = 2400 A		2868	
Available Only with Phase Type Option 3 PX and 690 V Type Voltage				
1700	TC = 1700 A			2031
2200	TC = 2200 A			2629
Available with all Phase Type Option Codes and 1000 V Type Voltage				
600[1]	TC = 600 A	600	1038	1038
900	TC = 900 A	900	1557	1557
Code	**Integrated Semiconductor Fuse**			
H	Integrated semiconductor fuse [REQUIRED]			
Code	**Forced Air Cooling Via Integrated Fan[1]**			
F	230 VAC forced air cooling via integrated fan [REQUIRED]			
Code	**Additional Options[2]**			
C09	PCB conformal coating			
C10	115 VAC forced air cooling via integrated fan[1]			

1 Not available with TC options < 170 A.

2 Choose as many as required.

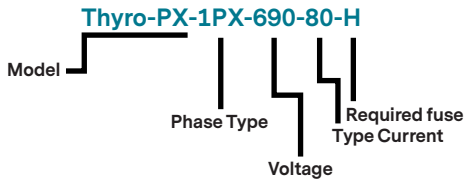

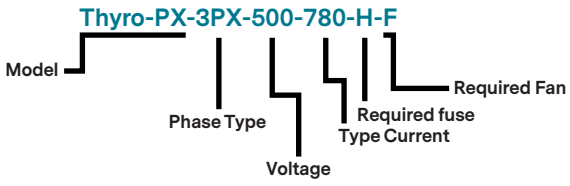

ABOUT ADVANCED ENERGY

Advanced Energy (AE) has devoted more than four decades to perfecting power for its global customers. AE designs and manufactures highly engineered, precision power conversion, measurement and control solutions for mission-critical applications and processes.

AE's power solutions enable customer innovation in complex semiconductor and industrial thin film plasma manufacturing processes, demanding high and low voltage applications, and temperature-critical thermal processes.

With deep applications know-how and responsive service and support across the globe, AE builds collaborative partnerships to meet rapid technological developments, propel growth for its customers and power the future of technology.

PRECISION | POWER | PERFORMANCE | TRUST

For international contact information,
visit advancedenergy.com.

powersales@aei.com (Sales Support)
productsupport.ep@aei.com (Technical Support)
+1 888 412 7832

Specifications are subject to change without notice. Not responsible for errors or omissions. ©2026 Advanced Energy Industries, Inc. All rights reserved.

ENG-ThyroPX-10.24.26