AIF42BAC-01N SERIES

504 W Full Brick PFC Converter



PRODUCT DESCRIPTION

Advanced Energy's AIF42BAC-01N series full-brick module accepts a wide 90 to 264 Vac input. Rated at 504 watts, the module has a high conversion efficiency of 93% typically and provides a nominal isolated output voltage of 12 Vdc with a 10 V auxiliary output. Featuring an industry-standard 2.4 x 4.6 in full-brick form factor and a height of only 0.55 in.

AT A GLANCE

Total Power

504 W

Input Voltage

90 to 264 Vac

# of Outputs

Main and Auxiliary

SPECIAL FEATURES

- 504 W continuous power
- High efficiency: 93% (typical)
- Baseplate optimized for contact cooling or heatsink mounting
- High reliability
- RoHS 6 compliant
- PMBus™ communication
- Feature rich control functions
- Standard full brick outline
- Parallel and current sharing version
- -40°C startup, -25°C operation
- Two-year warranty

SAFETY

- TUV
- CE EN62368-1
- UL 62368-1
- CB report
- UKCA mark

PMBus® Power Management. Defined.

RoHS

©2026 Advanced Energy Industries, Inc.

MODEL NUMBERS

Standard	Input Voltage	Output Voltage	Minimum Load	Maximum Load	Auxiliary Supply
AIF42BAC-01N	90 to 264Vac	12Vdc	0A	42A	10Vdc@250mA

Order Information

AIF	42	B	AC	-	01	N	(T)
①	②	③	④		⑤	⑥	⑦

①	Model series	Full brick size unit, AIF: full brick.
②	Output current	42: 42A rated output current
③	Output voltage	B: the output is 12Vdc
④	Input voltage type	AC: AC input
⑤	Model variant	01
⑥	Remote on/off logic	Blank is default and Positive enable. N: Negative enable
⑦	Thread option	Blank is threaded insert[1]. T: Non-threaded insert[2]

Note 1 - M3 x 0.5P; M3 x 0.5, 14 mm PCB standoff.
Note 2 - ϕ3.30±0.05; M3 x 0.5, 14 mm PCB standoff.

Options

None

ELECTRICAL SPECIFICATIONS

Absolute Maximum Ratings

Stress in excess of those listed in the "Absolute Maximum Ratings" may cause permanent damage to the power supply. These are stress ratings only and functional operation of the unit is not implied at these or any other conditions above those given in the operational sections of this TRN. Exposure to any absolute maximum rated condition for extended periods may adversely affect the power supply's reliability.

Table 1. Absolute Maximum Ratings[1]

Parameter	Model	Symbol	Min	Typ	Max	Unit
Input Voltage Operating - Continuous Surge Voltage (100 mSec)	All modules	$V_{IN,AC}$	90[2] -	- -	264 300	Vac Vac
Input Frequency	All modules		47	50/60	63	Hz
Maximum Output Power	All modules	$P_{O,max}$	-	-	504	W
Isolation Voltage Input to Output Input to Baseplate Output to Baseplate	All modules		 - - -	 - - -	 4000 2500 100	 Vdc Vdc Vdc
Operating Ambient Temperature	All modules	T_A	-40[3]	-	85	^{O}C
Operating Baseplate Temperature	All modules	$T_{_BP}$	-40[3]	-	100	^{O}C
Storage Temperature	All modules	T_{STG}	-40	-	105	^{O}C
Humidity (non-condensing) Operating Storage	 All modules All modules		 5 5	 - -	 90 95	 % %
Altitude Operating Non-operating	 All models All models		 0 0	 - -	 10000 40000	 Feet Feet
CMTBF Telcordia Issue 4, Method 1 Case1[4]	All modules		1.0	-	-	M Hours
Audible Noise[5]	$V_{IN,AC}$ = 90 to 264Vac		-	-	15	dBA

Note 1 - Unless otherwise indicated, specifications applied over all operating input voltage and temperature conditions. Standard test condition on a single unit.
Note 2 - PSU can extend the operation down to 85Vac after it's turned on at nominal input voltage range and output power is derated from 504W max to 470W max when operating at 85Vac.
Note 3 - The PSU might not meet spec during the PSU warm-up period when it cold starts at -40°C.
Note 4 - 50% electrical stress and 40°C component ambient temperature.
Note 5 - Measured 1 meter high and 1 meter away from the power supply.

ELECTRICAL SPECIFICATIONS

Input Specifications

Table 2. Input Specifications

Parameter	Condition	Symbol	Min	Typ	Max	Unit
Operating Input Voltage, AC	All	$V_{IN,AC}$	90	100-240	264	Vac
Input AC Frequency	All	f_{IN}	47	50/60	63	Hz
Maximum Input Current ($I_O = I_{O,max}$)	$V_{IN,AC}$ = 100Vac $V_{IN,AC}$ = 200Vac	$I_{IN,max}$	- -	- -	6 3	A A
No Load Input Current (V_O = On, I_O = 0A, I_{SB} = 0A)	$V_{IN,AC}$ = 115/230Vac	$I_{IN,no-load}$	-	0.1	-	A
No Load Input Power (V_O On, I_{SB} = 0)	$V_{IN,AC}$ = 115/230Vac	$P_{IN,no-load}$	-	5	-	W
Harmonic Line Currents[1]	I_O = 20% to 100%$I_{O,max}$ I_O = 100%$I_{O,max}$ I_O = 50% to 100%$I_{O,max}$	THD	10% max at 240Vac EN 61000-3-2 Class A EN 61000-3-2 Class C			
Power Factor	$V_{IN,AC}$ = 115Vac I_O > 20%$I_{O,max}$	PF	0.95	0.99	-	
	$V_{IN,AC}$ = 230Vac I_O > 50%$I_{O,max}$	PF	0.95	0.99	-	
Startup Surge Current (Inrush)[2]	$V_{IN,AC}$ = 240Vac	$I_{IN,surge}$	-	-	20	A
AC Input Leakage Current[3]	$V_{IN,AC}$ = 264Vac f_{IN} = 60Hz	$I_{IN,leakage}$	-	-	3.0	mA
AC Line Dropout Holdover Storage[4]	$I_O = I_{O,max}$	T_{off_hold}	20	-	-	mSec
AC Brown In Range	All	$V_{IN,AC}$	82	85	88	Vac
AC Brown Out Range	All	$V_{IN,AC}$	76	79	82	Vac
Efficiency	$V_{IN,AC}$ = 115Vac (60Hz) $V_{IN,AC}$ = 230Vac (50Hz)	η	- -	91.5 93.0	- -	% %
Turn On Delay	$I_O = I_{O,max}$	T_{on_delay}	-	-	3.5	Sec
Loop Stability Phase Margin Gain Margin			 45 -6	 - -	 - -	 Ø dB
Bulk Voltage[5]		V_{Bulk}	375	-	405	VDC

Note 1 - Tested with AE recommended external EMI filter.
Note 2 - Charging current for EMI-X capacitors is not considered to be inrush current.
Note 3 - Tested with AE recommended external EMI filter.
Note 4 - Tested with external 450V 560µF bulk cap.
Note 5 - Varied with different input and output voltage.

ELECTRICAL SPECIFICATIONS

Output Specifications

Table 3. Output Specifications

Parameter	Condition	Symbol	Min	Typ	Max	Unit
Factory Set Voltage	Half load	V_O V_{AUX}	- -	12 9.5	- -	Vdc Vdc
Maximum Output Power	All	$P_{O,max}$	-	-	504	W
Rated Output Current	All	I_O I_{AUX}[1]	0 0	- -	42 250	A mA
Total Regulation	Inclusive of set-point, line, load temperature change, warm-up drift	$\%V_O$ V_{AUX}	-5 8	- -	5 11	% Vdc
Output Voltage Adjust Range	All	V_O	10.8	-	13.2	Vdc
Output Voltage Ripple and Noise	Measure at 0.1µF of ceramic and 10µF of tantalum capacitance, over 0 to 20MHz bandwidth	V_O[2] V_{AUX}[2]	- -	- -	120 200	mV_{PK-PK} mV_{PK-PK}
Capacitance Load	All	C_O[3] C_{AUX}	1000 1	- -	10000 100	µF µF
Turn-on Voltage Ramp Time	From 10% to 90% voltage level	$T_{O,Ramp}$ $T_{AUX,Ramp}$	- -	- -	30 50	mSec mSec
Output Overshoot	All	$\%V_{O_Set}$ $\%V_{AUX}$	- -	- -	5 10	% %
AC ride through	Tested with external 450V 560µF bulk cap	$T_{O,ride}$	-	-	20	mSec
Dynamic Response[4] Peak Deviation Settling time	Start from $10\%I_{O,max}$ and 50% load change 1A/µSec slew rate	$\%V_O$ $T_{Settling}$	- -	±5 -	- 1	% mSec
Remote sense compensation		V_O	-	-	0.2	Vdc
Main Output Current Share Accuracy	All	$\%I_{O,max}$	-	-	10	%
Number of Parallel Units[5]	Main output current share connected		-	-	10	Units
PSU–Good High	Good state	PG_H	2.4	3.0	-	V
PSU–Good Low	Fault state	PG_L	0	-	0.8	V
PSU–Good Source Current	PSU–Good High	PG_source	-	-	10	mA
PSU–Good Sink Current	PSU–Good Low	PG_sink			2	mA

Note 1 - 150mA maximum for 1+1 and N+1 application.
Note 2 - Plus a 2200µF of load capacitance for the main output, and 1µF for the standby output.
Note 3 - Ceramic caps plus the low ESR & high ripple current cap load. The recommended ceramic caps are 20pcs of 22µF 16V (or 25V) ceramic cap minimum (GRM31CC71C226ME11L or equivalent). Recommended ceramic caps + 2 x 1000µF minimum of cap load (16SEPF1000M or equivalent) are closely placed around 1cm to the 12V output of AIF42BAC module.
Note 4 - Tested with recommended external output capacitors, and the power supply must operate within specified limits over the capacitive load range at 50 - 5KHz.
Note 5 - Tested up to 3 units by AEI.

ELECTRICAL SPECIFICATIONS

System Timing Specifications

Table 4. System Timing Specifications

Label	Parameter	Min	Typ	Max	Unit
T1	Auxiliary output voltage rise time for 10V from 10% to 90% of the voltage level.	5	-	50	mSec
T2	Main output voltage rise time for 12V from 10% to 90% of the voltage level.	5	-	30	mSec
T3	Delay from AC being applied to auxiliary output being within regulation.	500	-	2500	mSec
T4	Delay from AC being applied to main output being within regulation.	500	-	3500	mSec
T5	Hold up time - main output voltage stay within regulation after the loss of AC at full load.	20	-	-	mSec
T6	Delay from loss of AC input to de-assertion of PSU-Good.	20	-	-	mSec
T7	Delay from PSU enable active to main output voltage within regulation limit.	5	-	500	mSec
T8	Delay from PSU enable de-asserted to PSU-Good being de-asserted.	5	-	20	mSec
T9	Delay from output voltages in regulation to PSU-Good asserted.	100	-	200	mSec
T10	Delay from PSU-Good de-asserted to output voltages dropping out of regulation limits.	0.1	-	500	mSec

ELECTRICAL SPECIFICATIONS

System Timing Diagram

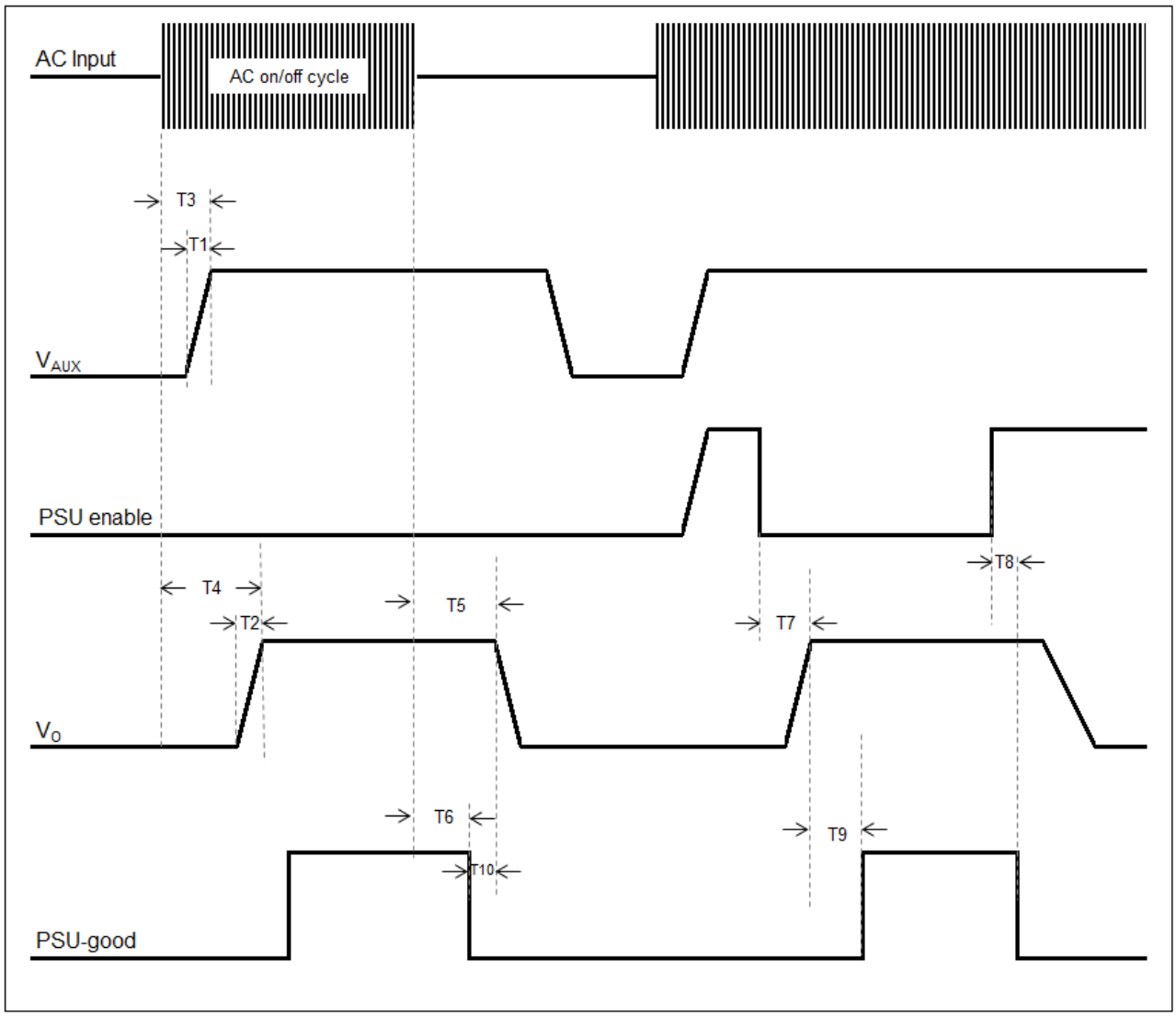

ELECTRICAL SPECIFICATIONS

AIF42BAC-01N Performance Curves

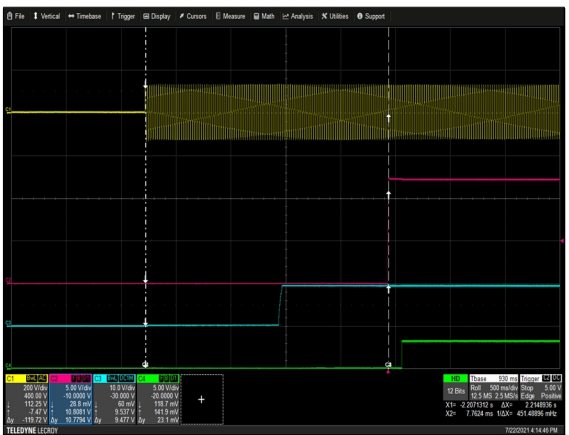

Figure 1: AIF42BAC-01N Turn-On Delay via AC Mains
Vin = 90Vac Load: I_O = 42A I_{SB} = 0.25A
Ch 1: AC Mains Ch 2: V_O Ch 3: V_{SB} Ch 4: PSU-Good



Figure 2: AIF42BAC-01N Turn-On Delay via PSON
Vin = 90Vac Load: I_O = 42A I_{SB} = 0.25A
Ch 1: AC Mains Ch 2: PSON Ch 3: V_O Ch 4: PSU-Good



Figure 3: AIF42BAC-01N Turn-On Delay via AC Mains
Vin = 264Vac Load: I_O = 42A I_{SB} = 0.25A
Ch 1: AC Mains Ch 2: V_O Ch 3: V_{SB} Ch 4: PSU-Good



Figure 4: AIF42BAC-01N Turn-On Delay via PSON
Vin = 264Vac Load: I_O = 42A I_{SB} = 0.25A
Ch 1: AC Mains Ch 2: PSON Ch 3: V_O Ch 4: PSU-Good

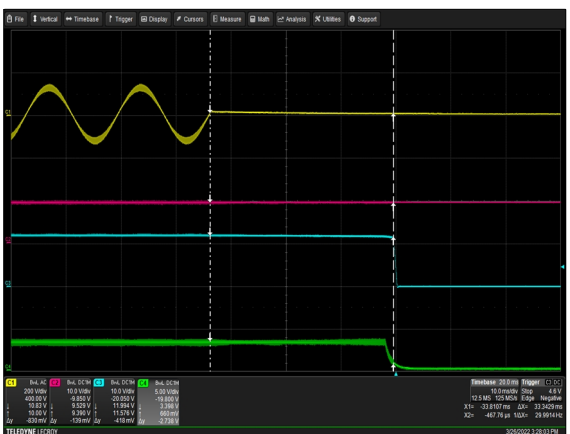

Figure 5: AIF42BAC-01N Hold-Up Time
Vin = 90Vac Load: Io = 42A I_{SB} = 0.25A
Ch 1: AC Mains Ch 2: V_{SB} Ch 3: V_O Ch 4: PSU-Good

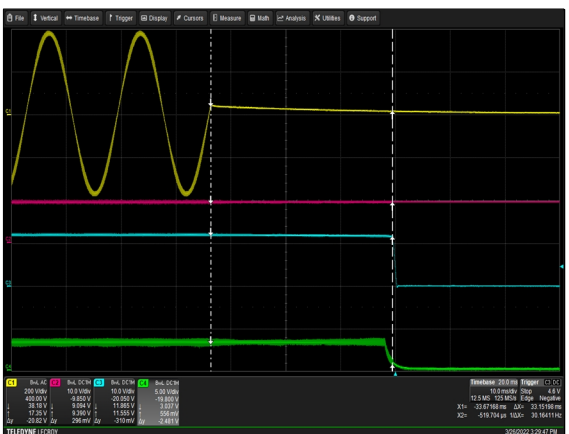

Figure 6: AIF42BAC-01N Hold-Up Time
Vin = 264Vac Load: Io = 42A I_{SB} = 0.25A
Ch 1: AC Mains Ch 2: V_{SB} Ch 3: V_O Ch 4: PSU-Good

ELECTRICAL SPECIFICATIONS

AIF42BAC-01N Performance Curves



Figure 7: AIF42BAC-01N Turn Off Characteristic via PSON
Vin = 230Vac Load: Io = 42A I_{SB} = 0.25A
Ch 2: PSON Ch 3: V_O Ch 4: PSU-Good

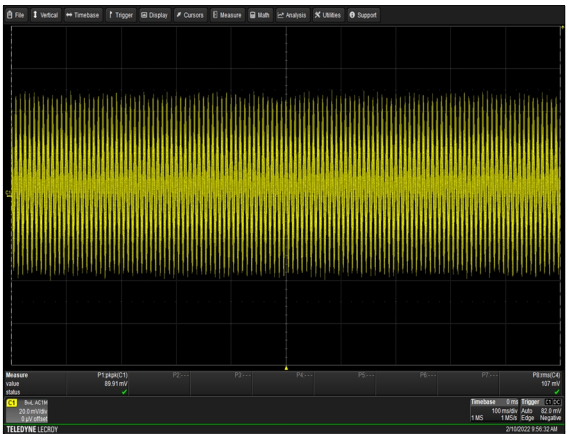

Figure 8: AIF42BAC-01N Ripple and Noise Measurement
Vin = 230Vac Load: Io = 42A I_{SB} = 0.25A
Ch 1: V_O

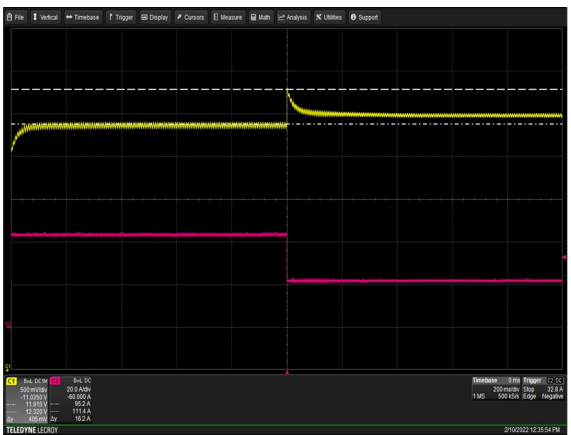

Figure 9: AIF42BAC-01N Transient Response - V_O Deviation
100% to 50% load change 1A/µs slew rate Vin = 230Vac
Ch 1: V_O Ch 2: I_O

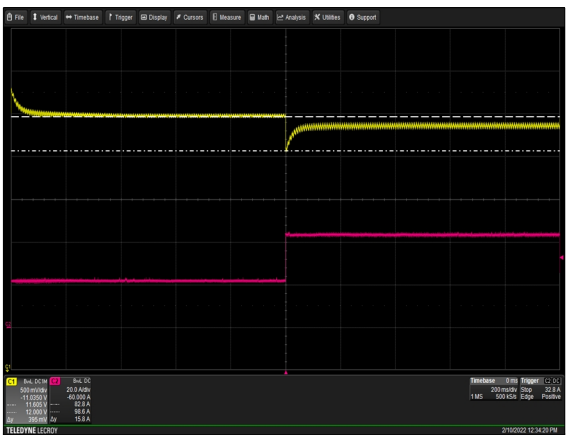

Figure 10: AIF42BAC-01N Transient Response - V_O Deviation
50% to 100% load change 1A/µs slew rate Vin = 230Vac
Ch 1: V_O Ch 2: I_O



Figure 11: AIF42BAC-01N Output Voltage Startup Characteristic
Vin = 230Vac Load: I_O = 42A
Ch 2 : V_O

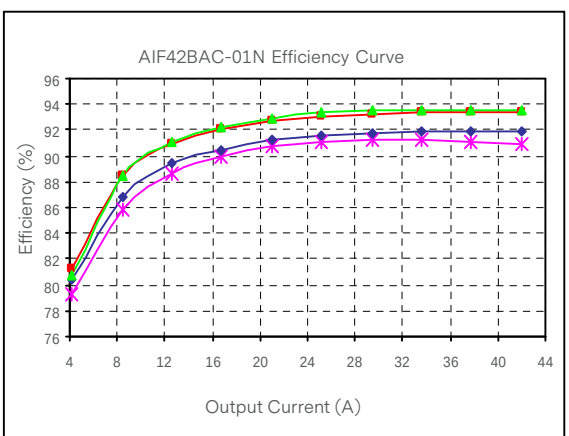

Figure 12: AIF42BAC-01N Efficiency Curve @ 25°C
90Vac 115Vac 230Vac 264Vac
Loading: I_{o_main} = 10%$I_{o,max}$ increment to $I_{o,max}$

ELECTRICAL SPECIFICATIONS

AIF42BAC-01N Performance Curves

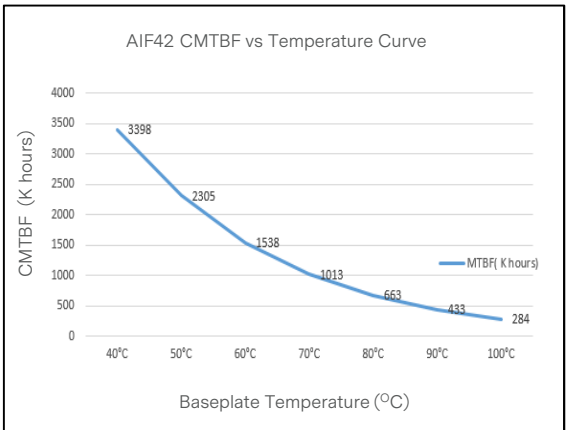

Figure 13: AIF42BAC-01N CMTBF vs Temperature Curve (K hours)

ELECTRICAL SPECIFICATIONS

Protection Function Specifications

Input Fuse

External Input fuse (s) (Safety Fast Blow type, 10A maximum) should be added to protect against catastrophic failures and to meet agency requirements in the application with AIF42BAC-01N.

Output Over Voltage Protection (OVP)

The power supply is latched off when the over voltage triggered. The latch can be cleared by removal of AC or remote on/off.

Parameter	Min	Typ	Max	Unit
V_O Output Overvoltage	13.6	14.4	15.0	Vdc
V_{AUX} Output Overvoltage	11.2	12.8	13.2	Vdc

Output Under voltage Protection (UVP)

The power supply is latched off when the over voltage <9.6Vdc. The latch can be cleared by removal of AC or remote on/off.

Parameter	Min	Typ	Max	Unit
V_O Output Undervoltage	9.6	/	/	Vdc

Over Current Protection (OCP)

The AIF42BAC-01N series have the current limit to prevent the main 12V output from exceeding the over current limit value. The 12V output goes into a constant current mode with voltage droop 1.33V/A typical when current exceeds 46.2A±5% (110%), it hits UVP during dropping at 48A±5% or OCP when current exceeds 51A±5%, then goes into hiccup mode. After 5x retry, it latches off.

Parameter	Min	Typ	Max	Unit	Fault mode
V_O Output Overcurrent	105	110	115	$\%I_{O,max}$	Constant current (CC)
	115	120	125	$\%I_{O,max}$	Latch after 5 times hiccup
V_{AUX} Output Overcurrent Protection	106	/	140	$\%I_{AUX,max}$	Hiccup mode

Short Circuit Protection (SCP)

Short circuit of the power supply outputs will not result in fire hazard, shock hazard, or damage to the power supply. Components will not be damaged during the short circuit conditions. Power supply must return to regulation automatically within 8 seconds after short is removed.

Note: A short circuit either between power output to signal ground will cause unit failure.

Over Temperature Protection (OTP)

The AIF42BAC-01N series power supply is protected against over temperature conditions caused by excessive Temp Mon ($102^{O}C \leq$ Temp Mon $\leq 112^{O}C$). In an OTP condition, the power supply shuts down the 12V output but leave the auxiliary 10V output on. The power supply restores the 12V output automatically when the OTP fault condition is no longer present or Temp Mon below $80^{O}C$.

ELECTRICAL SPECIFICATIONS

Reverse Sense Protection

Outputs with remote sense is protected against reversal of sense leads. The output shuts down if the sense leads are reversed or shorted together.

Fault Event Behavior

Fault Event	Parameter
OTP	12V main shuts down. Once the fault condition is removed then it recovers automatically. Auxiliary 10V always remains ON.
OTP recovery	Check fault status before 12V main recovers. If fault still presents, 12V main remains shut down.
12V Main OVP	12V main latches off when Vo exceeds 14V. PSU recovers by following methods: 1. AC power recycling, 2. the fault clear by PMBus command, 3. remote on/off. Auxiliary 10V always remains on.
Aux 10V OVP	Aux 10V latches off when Vaux exceeds 12.8V. PSU recovers by following methods: 1. AC power recycling, 2. the fault clear by PMBus command, 3. remote on/off.
12V Main OCP	12V main shuts down and retries to recover for 5 times then latches off if the fault still presents. PSU recovers by following methods: 1. AC power recycling, 2. the fault clear by PMBus command, 3. remote on/off. 10V Aux always remains on.
Aux 10V OCP	12V main doesn't shut down. Aux 10V shuts down and enters hiccup mode.
12V Main UVP	12V main shuts down when Vo drops below 9.6V. Once the fault condition is removed, it recovers automatically. 10V Aux always remains on.
12V Main short circuit	12V main shuts down and retries to recover for 5 times then latches off if the fault still presents. PSU recovers by following methods: 1. AC power recycling, 2. the fault clear by PMBus command, 3. remote on/off. 10V Aux always remains on.

MECHANICAL SPECIFICATIONS

Mechanical Outlines (unit: mm)

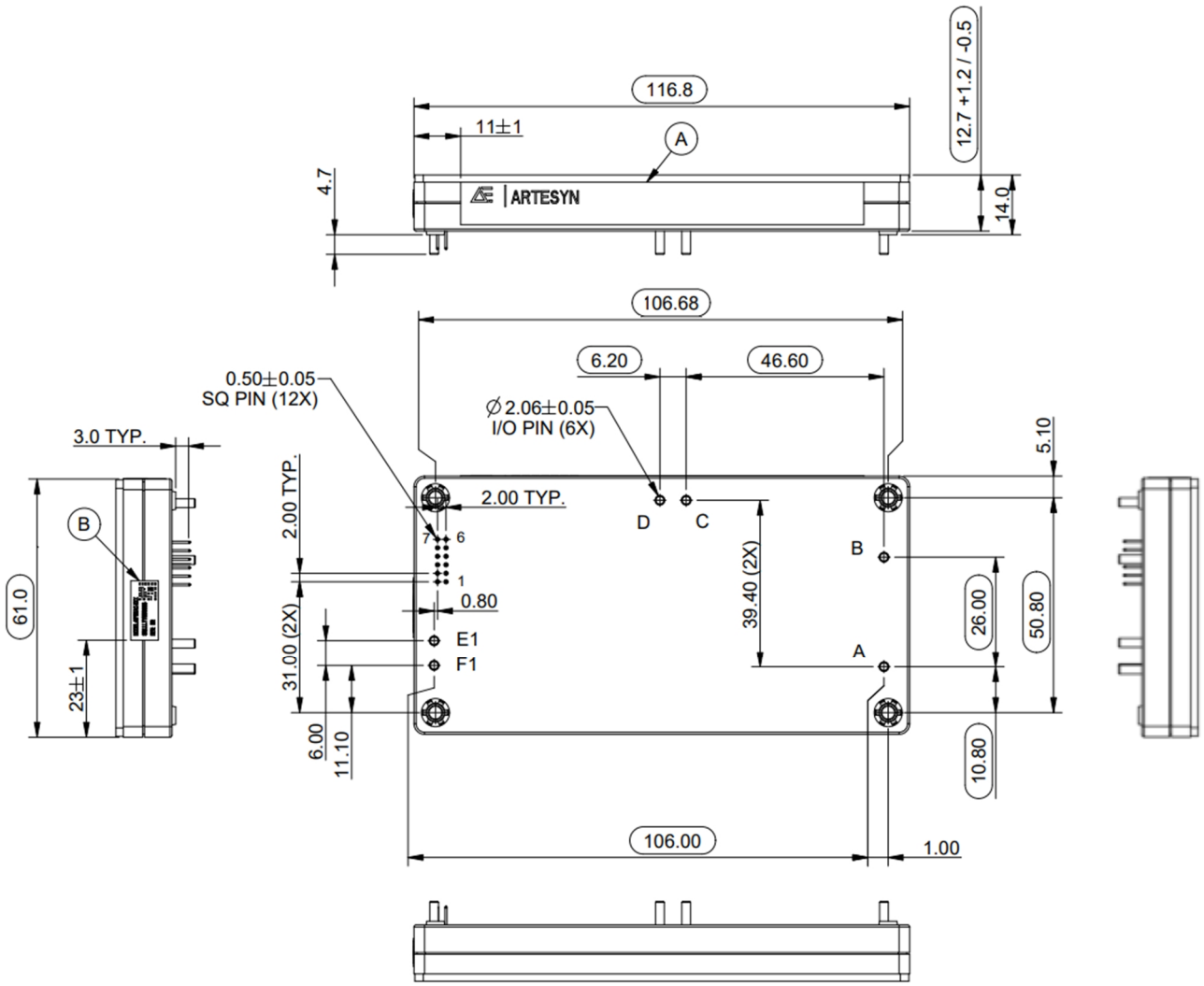

Note 1 - Module size: 14 x 61 x 116.8mm (H x W x L) with tolerance ±0.5mm

Note 2 - Surface flatness:

Concave inwards: 0.2mm max.

Convex outwards: 0.38mm max.

Note 3 - Material: plastic case with aluminum baseplate.

Note 4 - Max screw torque for mounting: 8 kgf-cm.

Note 5 - Cooling: conducted cool via heatsink

MECHANICAL SPECIFICATIONS

Power Supply Input & Output Connector

Power pins & signal pins of the PSU input & output connectors will be soldered to the system power board.

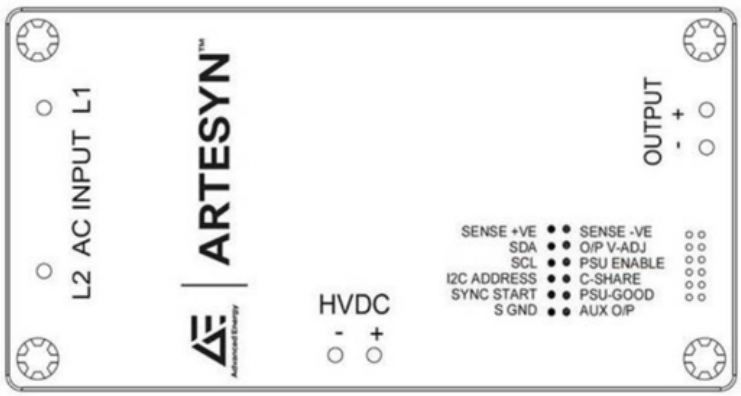

Pin Assignments

Pin Assignments		
Input (AC)	Output (DC)	Signal Pins
A: AC-in L1	E1: O/P -ve	1. SENSE +VE
B: AC-in L2	F1: O/P +ve	2. SDA
C: HVDC -ve		3. SCL
D: HVDC +ve		4. I²C ADDRESS
		5. SYNC START
		6. SIGNAL GND
		7. AUX O/P
		8. PSU-GOOD
		9. C-SHARE
		10. PSU ENABLE
		11. O/P V-ADJ
		12. SENSE -VE

Note - Recommended mating connector for pin 1 to pin 12: M22-6360646 from Harwin Inc.

The other pins: 5391-0-15-15-07-27-10-0 from Mill-Max Manufacturing Corp.

MECHANICAL SPECIFICATIONS

Weight

The AIF42BAC-01N series module weight is 260g typical and 320g maximum.

ENVIRONMENTAL SPECIFICATIONS

Safety Certifications

The AIF42BAC-01N series module is intended for inclusion in other equipment and the installer must ensure that it is in compliance with all the requirements of the end application. This product is only for inclusion by professional installers within other equipment and must not be operated as a stand alone product.

Table 5. Safety Certifications for AIF42BAC-01N Series Module

Standard	Agency	Description
UL 62368-1	UL	US and Canada Requirements
EN/IEC 62368-1	TUV	Europe Requirements
EN/IEC 62368-1	CE	CE Marking by Internal Verification/Certificate
EN/IEC 62368-1	CB	All CENELEC Countries
UKCA Mark	-	UK Requirements
RoHS and REACH	-	-

ENVIRONMENTAL SPECIFICATIONS

EMC Immunity

The power supply is an AC input power supply for which the Telco standards & approvals are not required. Target to meet the following requirement with AE recommended EMI filter.

Requirement	Specification	
Conducted Radiation	Class A with 6db margin minimum with AE recommended EMI filter	
Electrical Fast Transient (EFT)	2kV min	
Lightning Surge[1]	**Option 1** **EN55035** 1kV Differential mode 2kV Common mode	Criteria A
	Option 2 **ITU-T K.20** 2.5kV Differential mode 2.5kV Common mode	Criteria A
	EN300 132-1 2kV Differential mode 4kV Common mode	Criteria B

Note 1 - To meet option 2, please refer to EMI filter upgrade on page 33-35 together with Rev. AH or later units of AIF42BAC-01NT or AIF42BAC-01T.
To meet option 2, please refer to EMI filter upgrade on page 33-35 together with Rev. EE or later units of AIF42BAC-01N or AIF42BAC-01.

Conducted Emissions

The applicable standard for conducted emissions is EN55032. Conducted noise can appear as both differential mode and common mode noise currents. Differential mode noise is measured between the two input lines, with the major components occurring at the supply fundamental switching frequency and its harmonics. Common mode noise, a contributor to both radiated emissions and input conducted emissions, is measured between the input lines and system ground and can be broadband in nature.

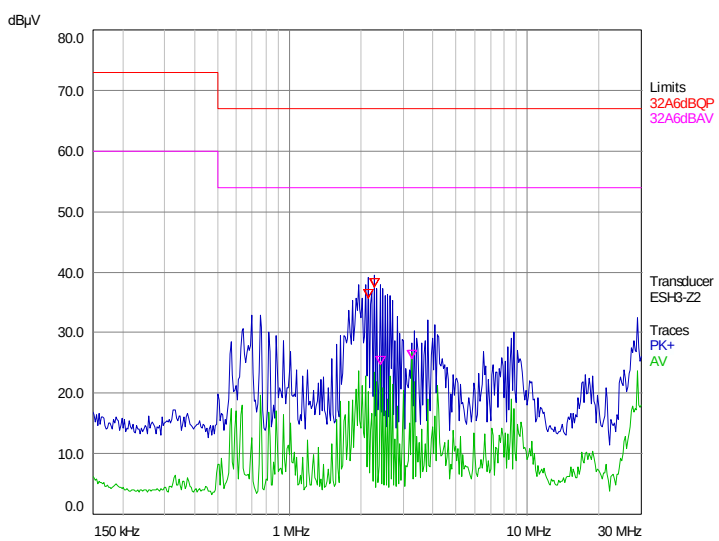

The AIF42BAC series power supply could connect with AE recommended external EMI filter to ensure the convertor's conducted EMI levels comply with EN55032 Class A limits. The EMI measurements are performed with resistive loads at maximum rated loading.

Sample of EN55032 conducted EMI measurement at 115Vac input.

Note: Red Line refers to Quasi Peak margin, which is 6dB below the CISPR international limit. Pink Line refers to the Average margin, which is 6dB below the CISPR international limit.

ENVIRONMENTAL SPECIFICATIONS

Operating Temperature

The AIF42BAC-01N series module can operate within specifications with ambient temperature between -40°C to +85°C, or baseplate temperate at center location range -40°C to +100°C. The power supply warning level is set at 104°C of Temp Mon (refer to Read Temperature via PMBus), and the operating temperature gradient 0.5°C per minute minimum.

Storage and Shipping Temperature

The AIF42BAC-01N series module can be stored or shipped at temperatures between -40°C to +105°C and relative humidity from 5 to 95%, non-condensing.

Humidity

The AIF42BAC-01N series module can operate within specifications when subjected to a relative humidity from 5 to 90% non-condensing. It exceeds ASHRAR class 2 requirement as below, and the operating humidity temperature gradient 10% per hour minimum.

Operating Temperature Range	Operating Humidity Range
6°C to 10°C	5 to 85% RH
10°C to 28°C	10 to 90% RH
29°C to 50°C	15 to 50% RH

The AIF42BAC-01N series power supply can be stored in a relative humidity from 5% to 95% at 65°C for 24 hours, non-condensing, and the non-operating humidity temperature gradient 10% per hour maximum.

Derating Curves

The AIF42BAC-01N can extend the operation down to 85Vac after it's turned on at nominal input voltage range and output power is derated from 504W max to 470W max when operating at 85Vac.

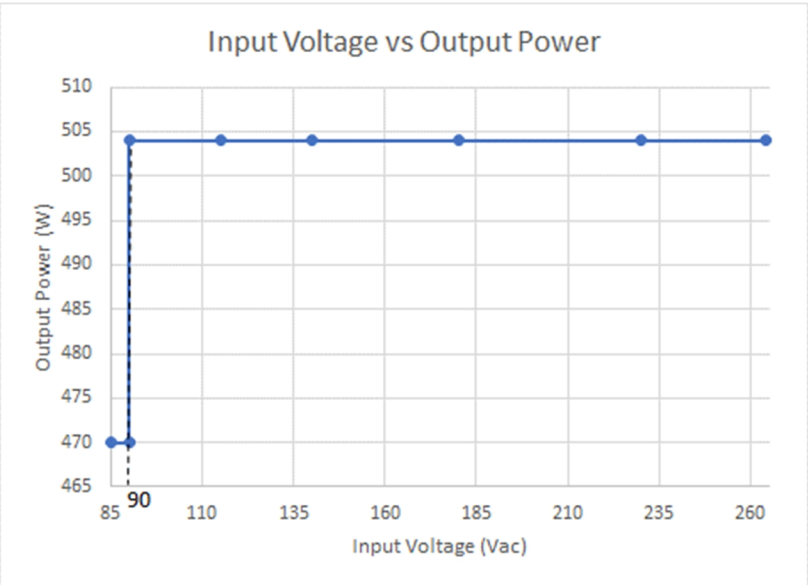

ENVIRONMENTAL SPECIFICATIONS

The power supply provides a derated output current for higher output voltage as below curve.

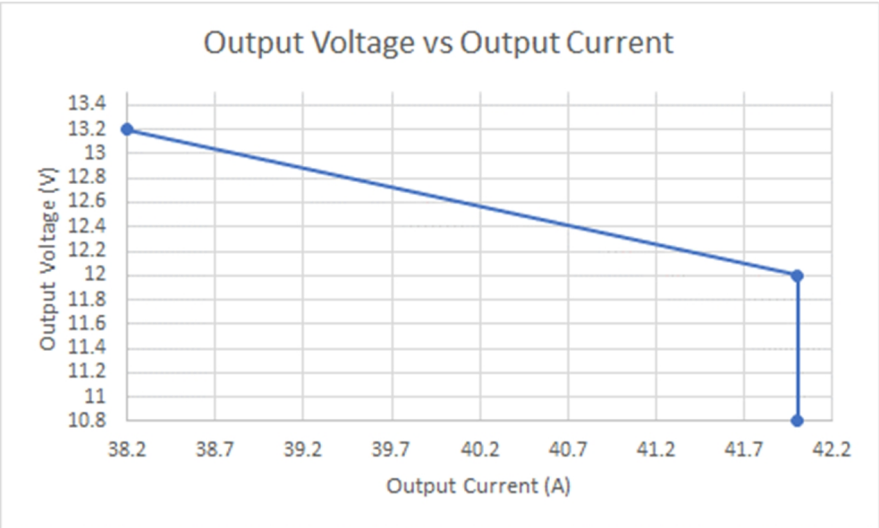

The baseplate at center location is controlled less than 100°C for any operating conditions.

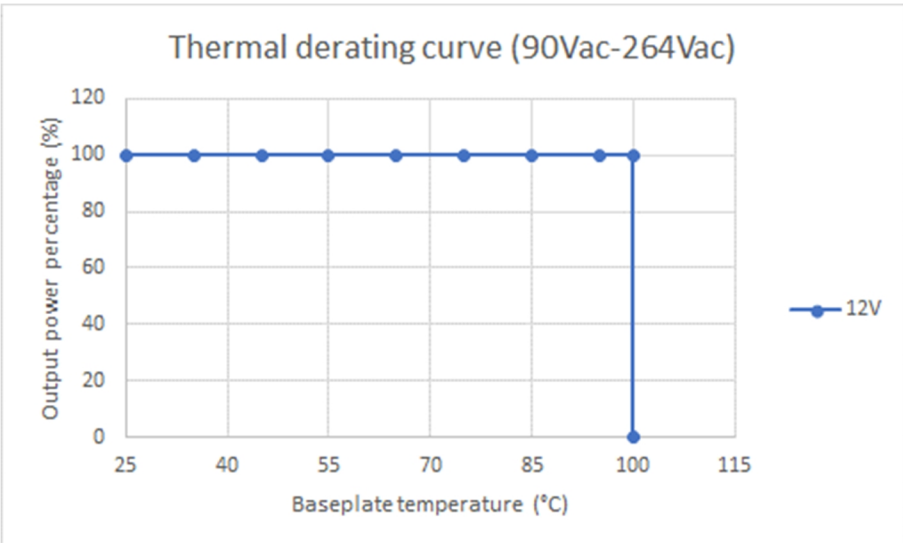

ENVIRONMENTAL SPECIFICATIONS

Vibration

The AIF42BAC-01N series power supply passes the following vibration specifications:

Non-Operating Random Vibration

Acceleration	3.8	gRMS
Duration	30 per axes	Mins
Direction	3 mutually perpendicular axis	

Operating Random Vibration

Acceleration	2.4	gRMS
Duration	30 per axes	Mins
Direction	3 mutually perpendicular axis	

Shock

The AIF42BAC-01N series power supply passes the following shock specifications:

Non-Operating Half-Sine Shock

Acceleration	40	G
Duration	15	mSec
Pulse	Half-Sine	
Number of Shock	3 times in each of 6 faces	

Operating Half-Sine Shock

Acceleration	30	G
Duration	11	mSec
Pulse	Half-Sine	
Number of Shock	3 times in each of 3 axes	

POWER AND CONTROL SIGNAL DESCRIPTIONS

AC Input Pin

These pins provide the AC Mains to the AIF42BAC-01N series module.

L1 - AC Input Line / Return
L2 - AC Input Line / Return
HVDC +ve - Primary bulk voltage using for bulk cap positive connection
HVDC -ve - Bulk cap negative connection only, not primary bulk voltage return

DC Output Pin

These pins provide the main output for the AIF42BAC-01N series module. The "+" and the "-"pins are the output positive and output negative rails. The output (V_O) pins are electrically isolated from the power supply chassis.

O/P- - Main 12V Output (Vo Return)
O/P+ - Main 12V Output (Vo)

Control Signals

The AIF42BAC-01N series module contains a 12 pins control signal header providing an analogue control interface.

SENSE +VE / SENSE +VE - (pins 1,12)

SENSE +VE and SENSE -VE are the remote sense signals for 12V main output voltage. This remote sense circuit is designed to compensate for a power path drop of 200mV max on sense line.

SDA - (pin 2)

Serial data line is pulled up to 3.3V with 4.7K ohm resistor internally.

SCL - (pin 3)

Serial clock line is pulled up to 3.3V with 4.7K ohm resistor internally.

I²C ADDRESS - (pin 4)

The I²C ADDRESS pin supports both PMBus module address selection with multiple modules.

R_address (ohm) , 1%	Address (HEX)
0	50
1240	51
2870	52
4990	53
8060	54
12400	55
20000	56
34800	57
80600	58
open	59

POWER AND CONTROL SIGNAL DESCRIPTIONS

SYNC START - (pin 5)

SYNC START pin is an I/O pin which is pulled high internally when the unit itself is ready and also detect the other units SYNC START pin readiness. If all the parallel units SYNC START pin are in high state, they will turn on simultaneously. This feature is designed for the system presenting a load that is larger than the one AIF module capability to start up without risking the possibility going into the overcurrent protection. If PSU Enable on AIF modules are defaulted ON by the application and different AC sources are used for 1+1, N+1 & N+0 configurations, Vo will only follow the last powered up AC source to turn on when Sync start pins of all modules are tied together.

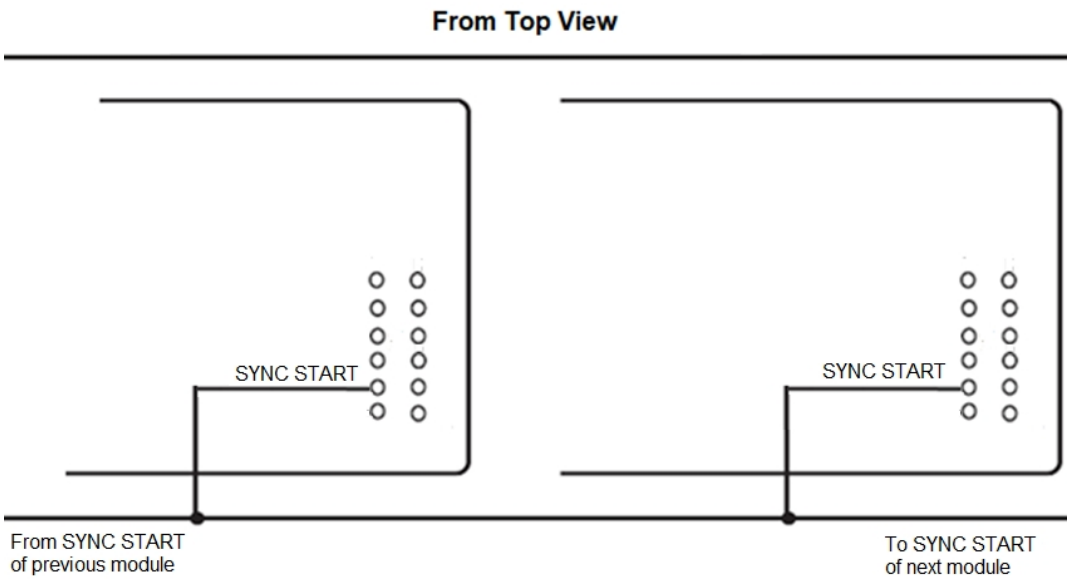

SIGNAL GND - (pin 6)

The SIGNAL GND (S GND) is internally connected to the –O/P terminal via a 1 ohm resistor, and it's the signal return for I/O signals (SDA, SCL, C-SHARE, SYNC START, etc.).

Aux O/P - (pin 7)

The Aux O/P supports 10V 250mA logic driving but doesn't support current sharing. (Reference to Signal GND for Aux return) Overcurrent is triggered when Aux load > 250mA or Cap load > 100µF during N+0 configuration. The maximum output current is 150mA for 1+1 and N+1 applications.

PSU-Good (status) - (pin 8)

This signal indicates that the 12V main and aux output voltages are operational. High logic is: 10.4V < main output < 13.6V, and when aux output is between 8V and 12V. If any of the outputs fail due to over current protection, over voltage protection, output under voltage, or over temperature protection, then this signal will be driven low. (3V3 logic signal. PSU with 200 ohm pull-up from 3.3V and 10K ohm to SCOM. No external pull-up resistor is required.)

POWER AND CONTROL SIGNAL DESCRIPTIONS

C-Share - (pin 9)

Main output current bus for active current sharing used. The C-SHARE pins on each of the sharing group modules need to be connected together.

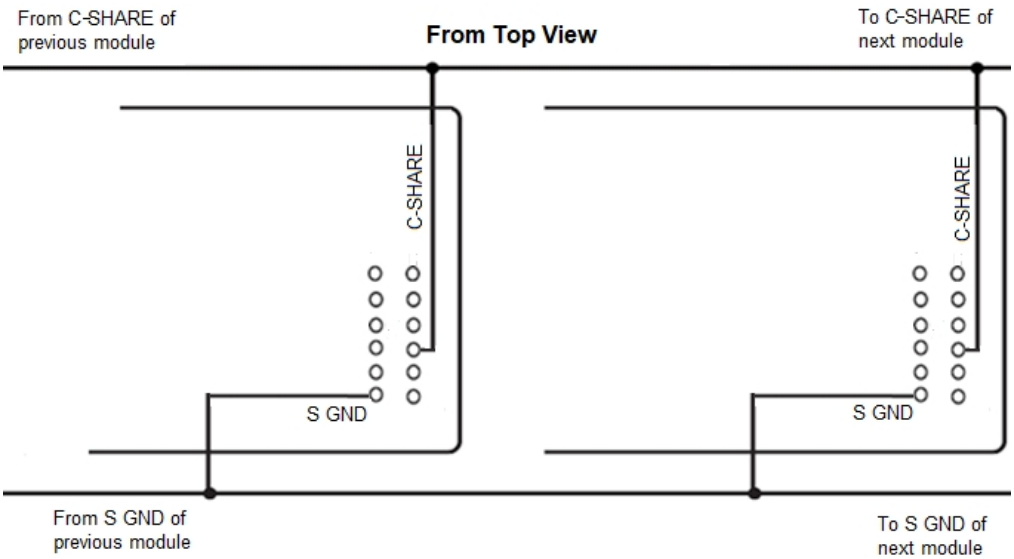

PSU enable - (pin 10)

The enable pin is a LVTTL compatible input used to turn the output of the module on or off.

For module with suffix “N”, the output is enabled when it’s connected to Signal GND or driven to a logic low < 0.8V (but not negative). The output is disabled when it is open or driven to a logic high > 2.0V.

Note: Some oscillating behavior at around 2V to 3.3V, which is related to internal driving bias, is considered normal behavior and may be seen at PSU enable input signal pin when AC is turned off and PFC bulk voltage is discharged to less than 50V. The behavior at “turn-off” does not affect any function and application operation even under AC input on/off cycling condition.

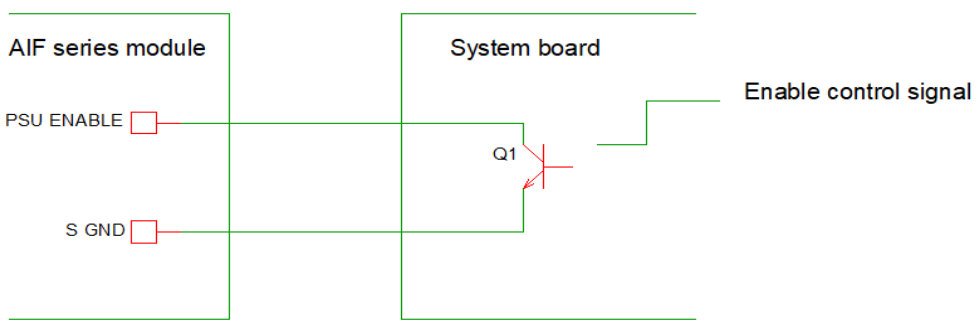

POWER AND CONTROL SIGNAL DESCRIPTIONS

O/P V-adj (resistor) - (pin 11)

The output voltage of the module can be adjusted from 10.8V to 13.2V via 0.1% resistor.

12V main output voltage can be adjusted by changing value of resistor (Rtrim) connected from pin O/P V-adj to signal GND.

The resistor is not necessary when Vo set at 12V.

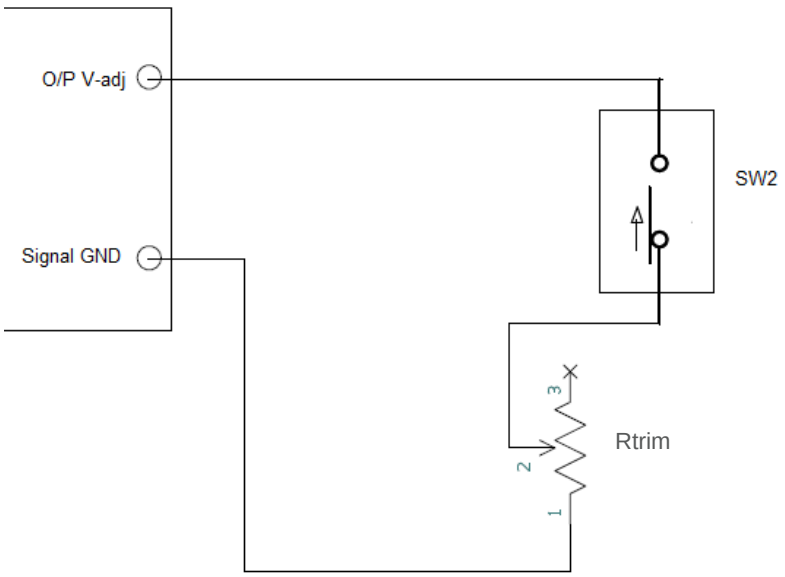

The relation of Vo to Rtrim is below.

$$Vo = \frac{14347.443}{Rtrim + 4518.182} + 10.025$$

Vo is in V.

Rtrim is in ohm.

Rtrim resistor is not necessary when Vo set at 12V.

When Rtrim is greater than 14k ohm and lower than 30k ohm, the output voltage will be clamped to 10.8V and will not go lower.

To get the tight output voltage tolerance, it's highly recommended that the Rtrim is 0.1% tolerance resistor with good temperature coefficient. Below table shows the typical output voltage vs Rtrim value.

Rtrim (ohm)	Vo (V)
14k < Rtrim <30k	10.8
2.74k or Open	12
0	13.2

O/P V-adj pin read once the Rtrim value when the Aux is ready, the main output voltage adjustment can be overridden by PMBus after that.

PMBus™ Specifications

AIF42BAC-01N Series PMBus™ General Instructions

The AIF42BAC-01N series is compliant with the industry standard PMBus™ protocol for monitoring and control of the power supply via the I²C interface port.

Equipment Setup

The following is typical I²C communication setup[1]:

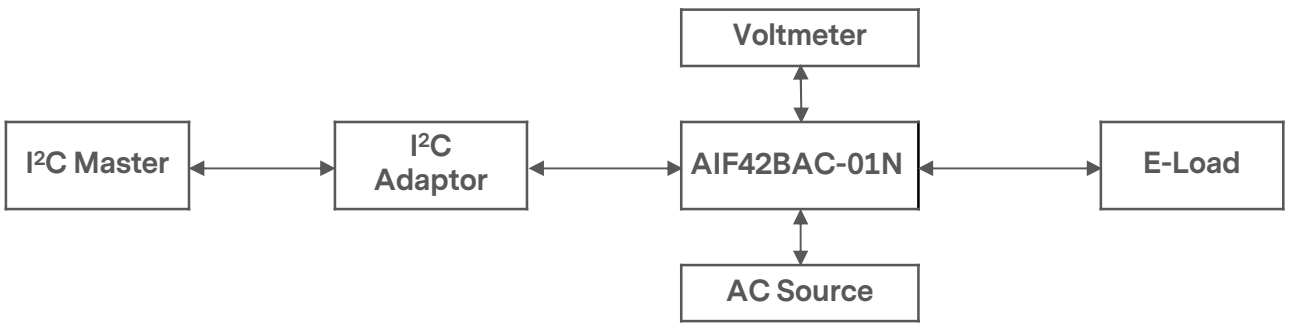

Note 1 - I²C buffer is recommended when 3 units or above are operating together.

I²C Accuracy

Output Load	Input Voltage	Input Current	Input Power	Output Voltage	Output Current	Output Power
1% to <= 5% Load	±5%	±0.5A	±20W	±2%	±1A	±20W
>5% to <=20% Load	±5%	±10%	±10%	±2%	±10%	±10%
>=20% to 100% Load	±5%	±5%	±5%	±2%	±5%	±5%

Note - Nominal input voltage 115Vac/60Hz, 230Vac/50Hz unless otherwise noted.

PMBUS™ SPECIFICATIONS

AIF42BAC-01N Support PMBus™ Command List

The AIF42BAC-01N series module is compliant with the industry standard PMBus™ protocol for monitoring and control of the power supply via the I²C interface port. PEC is supported, PMBus™ clock speed supports up to 400Kbps.

PMBus™ specification revision is 1.2 and SMBus™ specification revision is 2.0.

URL to PMBus™/SMBus™ Org specifications: https://pmbus.org/specification-archives/ and http://smbus.org/specs/

AIF42BAC-01N Supported PMBus™ Command List:

Command Code	Command Name	Default Value	Access Type	Data Bytes	Data Format	Description
00h	PAGE	-	R/W	1	-	Page 0 (main output) Page 1 (auxiliary output)
01h	OPERATION	80	R/W	1	-	Enable/disable, margin settings. Immediate off, nominal margin Only support page 0
03h	CLEAR_FAULTS	-	S	-	-	Clear any fault bits that have been set, including IOUT_FOC_TRIGGER Fault bit at command DCh. Support page 0&1
12h	RESTORE_DEFAULT_ALL	-	S	-	-	Load default configuration data to RAM and should use STORE USER ALL command to store the data to internal flash (only under main output off state)[1]. Only support page 0
15h	STORE_USER_ALL	-	W	0	-	Save configuration data to internal flash (only under main output off state)[1]. Only support page 0
19h	CAPABILITY	80	R	1	Bitmapped	Provides a way for the hosts system to determine some key capabilities of a PMBus™ device. Support page 0&1
	b7 - Packet Error Checking	1				0 - PEC not supported 1 - PEC supported
	b6:5 - Maximum Bus Speed	00				00 - Maximum supported bus speed, 100KHz 01 - Maximum supported bus speed, 400KHz 10 - Maximum supported bus speed, 1MHz 11 - Reserved
	b4 - SMBALERT#	0				0 - SMBus Alert Pin not supported 1 - SMBus Alert Pin supported
	b3:0	0000				Reserved
20h	VOUT_MODE	1A	R	1	-	Scaling factor on voltage data for commanding or reading the output voltage Only support page 0
	b7:5 - Mode	000				Data formats for the output voltage and output voltage related parameters.
	b4:0 - Parameter	11010				N is a parameter for linear 16.

Note 1 - System/user will disable the main output (by PSU enable pin or OPERATION OFF command) first, and use "STORE_USER_ALL" (15h) command to store the data to internal flash for all the following writeable commands (21h, 40h, 44h, 46h, 4Fh, D0h), otherwise, the updated data would be lost in next PSU power up.

PMBUS™ SPECIFICATIONS

AIF42BAC-01N Series Supported PMBus™ Command List

Command Code	Command Name	Default Value	Access Type	Data Bytes	Data Format	Description
21h	VOUT_COMMAND[2]	0000	R/W	2	Linear	Sets the Output Voltage Reference Vout command sends discreet value to change output voltage. Only support page 0
40h	VOUT_OV_FAULT_LIMIT[2]	-	R/W	2	Linear	Sets the VOUT overvoltage fault threshold. Only support page 0.
44h	VOUT_UV_FAULT_LIMIT[2]	-	R/W	2	Linear	Sets the VOUT under voltage fault threshold. Only support page 0.
46h	IOUT_OC_FAULT_LIMIT[2]	-	R/W	2	Linear	Sets the IOUT over current fault threshold. Only support page 0.
4Fh	OT_FAULT_LIMIT[2]	-	R/W	2	Linear	Sets the over-temperature fault limit. Only support page 0.
78h	STATUS_BYTE[3]	-	R	1	Bitmapped	Returns the summary of critical faults. Support page 0&1
	b7 - BUSY					A fault was declared because the device was busy and unable to respond.
	b6 - OFF					This bit is asserted if the unit is not providing power to the output. Refer to VOUT_UV_FAULT.
	b5 - VOUT_OV_Fault					An output overvoltage fault has occurred. >= 14Vdc, the status is latched.
	b4 - IOUT_OC_Fault					An output overcurrent fault has occurred. (>=51A)
	b3 - VIN_UV_Fault					An input undervoltage fault has occurred. 79Vac: Undervoltage fault. 85Vac: Recovery.
	b2 - TEMPERATURE					A temperature fault or warning has occurred. 108°C: Temperature fault.
	b1 - CML					A communication, memory or logic fault has occurred.
	b0 - NONE OF THE ABOVE					A fault or warning not listed in bits [7:1] has occurred.

Note 2 - System/user should write reasonable data (not out of default setting) for all the following writeable commands (21h, 40h, 44h, 46h, 4Fh), otherwise, PSU would ignore the data and set INVALID DATA bit of STATUS CML.

Note 3 - The fault limits (for example, output OC limit, output OV limit) are for main output only.
The fault detection of Auxiliary 10V output as below:
a. A hardware interrupt is for OCP detection of Aux 10V,
b. >12.8V: output OVP set. <12.6V: output OVP reset.

PMBUS™ SPECIFICATIONS

AIF42BAC-01N Series Supported PMBus™ Command List

Command Code	Command Name	Default Value	Access Type	Data Bytes	Data Format	Description
79h	STATUS_WORD	-	R	2	Bitmapped	Summary of units fault and warning status. Support page 0&1
	b15 - VOUT					An output voltage fault or warning has occurred.
	b14 - IOUT					An output current or power fault or warning has occurred.
	b13 - INPUT					An input voltage, current or power fault or warning as occurred.
	b12 - MFR_SPECIFIC					A manufacture specific fault or warning has occurred.
	b11 - POWER_GOOD#					The POWER_GOOD signal is de-asserted.
	b10 - OTHERS					A bit in STATUS_OTHER is set.
	b9:8 - UNKNOWN					A fault or warning not listed in bits [15:1] has occurred.
	b7 - BUSY					A fault was declared because the device was busy and unable to respond.
	b6 - OFF					This bit is asserted if the unit is not providing power to the output. Refer to VOUT_UV_FAULT.
	b5 - VOUT_OV_FAULT					An output overvoltage fault has occurred. >= 14Vdc, the status is latched.
	b4 - IOUT_OC_FAULT					An output overcurrent fault has occurred. (>=51A)
	b3 - VIN_UV_FAULT					An input undervoltage fault has occurred. 79Vac: Undervoltage fault. 85Vac: Recovery.
	b2 - TEMPERATURE					A temperature fault or warning has occurred. 108°C: Temperature fault.
	b1 - CML					A communication, memory or logic fault has occurred.
	b0 - NONE OF THE ABOVE					A fault or warning not listed in bits [7:1] has occurred.
7Ah	STATUS_VOUT	-	R	1	Bitmapped	
	b7 - VOUT Over-Voltage Fault	-				VOUT Over-Voltage Fault >= 14Vdc, The status is latched.
	b6 - VOUT Over-Voltage Warning	-				Reserved
	b5 - VOUT Under-Voltage Warning					Reserved
	b4 - VOUT Under-Voltage Fault					VOUT Under-Voltage Fault 9.6Vdc fault, 10.2Vdc normal.
	b3:0					Reserved

PMBUS™ SPECIFICATIONS

AIF42BAC-01N Series Supported PMBus™ Command List

Command Code	Command Name	Default Value	Access Type	Data Bytes	Data Format	Description
7Bh	STATUS_IOUT		R	1	Bitmapped	
	b7 - IOUT Overcurrent Fault					IOUT Overcurrent Fault >=51A
	b6 - IOUT OC and LV Fault					Output overcurrent and low voltage fault
	b5 - IOUT Overcurrent Warning					IOUT Overcurrent Warning Keep the same as output overcurrent fault.
	b4:0					Reserved
7Ch	STATUS_INPUT		R	1	Bitmapped	Input related faults and warnings
	b7 - VIN_OV_FAULT					Input overvoltage fault. 285Vac: Overvoltage fault. 267.5Vac: Recovery.
	b6 - VIN_OV_WARNING					Input overvoltage warning.
	b5 - VIN_UV_WARNING					Input undervoltage warning.
	b4 - VIN_UV_FAULT					Input undervoltage fault. 79Vac: Undervoltage fault. 85Vac: Recovery.
	b3 - Unit Off For Low Input Voltage					This bit will set if VIN_UV_FAULT is occurred. If input voltage never exceeded the input turn-on threshold, only this bit will set.
	b2:0					Reserved
7Dh	STATUS_TEMPERATURE		R	1	Bitmapped	Temperature related faults and warnings
	b7 - Over Temperature Fault					Over temperature fault 108°C: Over temperature fault 80°C: Recovery
	b6 - Over Temperature Warning					Reserved
	b5:0					Reserved
7Eh	STATUS_CML		R	1	Bitmapped	Communications, logic and memory
	b7 - Invalid/Unsupported command					Invalid or unsupported command received
	b6 - Invalid/Unsupported Data					Invalid or unsupported data received
	b5 - PEC Error					Packet error check failed
	b4 - Memory Fault Detected					CRC of memory that does not match the initial CRC value.
	b3:2					Reserved
	b1					A communication fault other than the ones listed in this table has occurred.
	b0					Other Memory or Logic Fault has occurred.

PMBUS™ SPECIFICATIONS

AIF42BAC-01N Series Supported PMBus™ Command List

Command Code	Command Name	Default Value	Access Type	Data Bytes	Data Format	Description
88h	READ_VIN		R	2	Linear	Returns input voltage in Volts ac. Required range is 0 to 310Vac.
89h	READ_IIN		R	2	Linear	Returns input current in Amperes. Required range is 0 to 15A.
8Bh	READ_VOUT		R	2	Linear	Returns the actual, measured voltage in Volts. Required range is 0 to 19.8Vdc.
8Ch	READ_IOUT		R	2	Linear	Returns the output current in amperes. Required range is 0 to 100A.
8Dh	READ_TEMPERATURE_1		R	2	Linear	Returns the baseplate temperature in degree Celsius. Required range is -50 to 125°C.
96h	READ_POUT		R	2	Linear	Returns the output power, in Watts. Required range is 0 to 800W.
97h	READ_PIN		R	2	Linear	Returns the input power, in Watts. Required range is 0 to 600W.
98h	PMBUS_REVISION		R	1	Bitmapped	PMBus protocol revision. The revision 1.2 in hex is 0x42.
99h	MFR_ID	ARTESYN	BR/BW	Varies	ASCII	Manufacture name, It's ASCII code.
9Ah	MFR_MODEL	AIF42BAC-01N	BR/BW	Varies	ASCII	Manufacture model name, it's ASCII code.
9Bh	MFR_REVISION	XX	BR/BW	Varies	ASCII	X: 0-9 and A-Z, it's ASCII code.
9Ch	MFR_LOCATION	PH	BR/BW	Varies	ASCII	MFG Name
9Dh	MFR_DATE	YYMMDD	BR/BW	Varies	ASCII	YY- year, MM- Month, DD-Day
9Eh	MFR_SERIAL		BR	Varies	ASCII	20 ASCII codes.
A0h	MFR_VIN_MIN	F8C8	R	2	Linear	Minimum input voltage (100Vac)
A1h	MFR_VIN_MAX	F3C0	R	2	Linear	Maximum input voltage (240Vac)
A2h	MFR_IIN_MAX		R	2	Linear	Maximum input current (8A)
A3h	MFR_PIN_MAX		R	2	Linear	Maximum input power (600W)
A4h	MFR_VOUT_MIN	02B3	R	2	Linear	Minimum output voltage Regulation window (10.8Vdc)
A5h	MFR_VOUT_MAX	034C	R	2	Linear	Maximum output voltage. Regulation window (13.2Vdc)
A6h	MFR_IOUT_MAX		R	2	Linear	Maximum output current (42A)
A7h	MFR_POUT_MAX		R	2	Linear	Maximum output power (504W)
A8h	MFR_T_BASEPLATE_MAX		R	2	Linear	Maximum baseplate temperature 125°C
A9h	MFR_T_BASEPLATE_MAX		R	2	Linear	Minimum baseplate temperature -40°C
D0h	MAIN_VOUT_OVERRIDDEN	55	R/W	1	Hex	0x55: HW Resistor Adjustment 0xAA: PMBus VOUT_COMMAND Other values: reserved Get current setting of output voltage Adjustment 0x55: HW Resistor Adjustment (Default) 0xAA: PMBus VOUT_COMMAND Other values: reserved

PMBUS™ SPECIFICATIONS

AIF42BAC-01N Series Supported PMBus™ Command List

Command Code	Command Name	Default Value	Access Type	Data Bytes	Data Format	Description
D5h	MFR_ SPECIFIC_05	MNNN XYYYY	BR	10	ASCII	NNNN Returns the PS FW revision. Primary side major and minor rev. XYYYY Returns the PS FW revision. Secondary / PMBus MCU major and minor rev. Fill Blank Bytes with ASCII Space char if needed.

Note:
For linear mode:

The Linear Data Format is a two byte value with:

- An 11 bit, two's complement mantissa and
- A 5 bit, two's complement exponent (scaling factor).

The format of the two data bytes is illustrated in Figure 4.

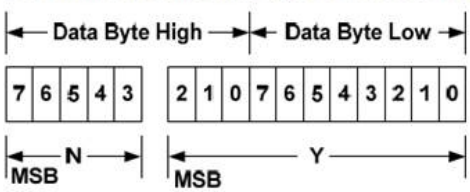

Figure 4. Linear Data Format Data Bytes

The relation between *Y*, *N* and the "real world" value is:

$X = Y \cdot 2^N$

Where, as described above:

X is the "real world" value;

Y is an 11 bit, two's complement integer; and

N is a 5 bit, two's complement integer.

Devices that use the Linear format must accept and be able to process any value of *N*.

PMBus™ SPECIFICATIONS

For Vout_mode:

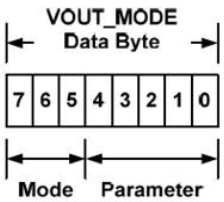

Figure 5. VOUT_MODE Command Data Byte Structure

If a device accepts the VOUT_MODE command, the Mode and Parameter are retained until changed with another VOUT_MODE command or until the bias power is removed.

Sending the VOUT_MODE command using the SMBus Read Byte protocol returns one byte with the Mode and Parameter as shown in Figure 5.

Table 2 shows the permitted values and format of the VOUT_MODE data byte. More information on the VOUT_MODE command is used with output voltage related commands is given below in Section 8.3.

Table 2. Summary Of The VOUT_MODE Data Byte Format

Mode	Bits [7:5]	Bits [4:0] (Parameter)
Linear	000b	Five bit two's complement exponent for the mantissa delivered as the data bytes for an output voltage related command.
VID	001b	Five bit VID code identifier per
Direct	010b	Always set to 00000b

APPLICATION NOTES

Recommended External EMI Filter

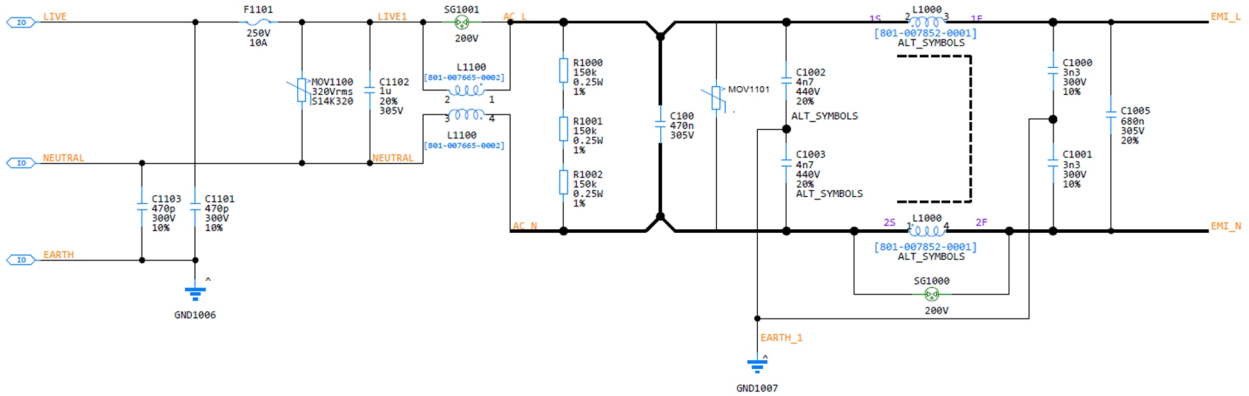

Recommended L1000 and L1100

Component	L1000	L1100
Manufacture P/N	Toroid TL10	Toroid VITROPERM 500 F
Turn ratio	25:25	16:16
Wire Gauge (mm)	Dia. 1.1	Dia. 1.0
Dimension (mm)	28.2 x 19.9 x 30	26 x 14.2 x 27.2
Inductance	5 to 9.6mH	11 to 21mH
Schematic	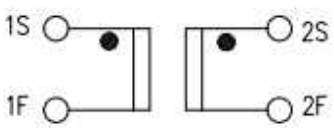	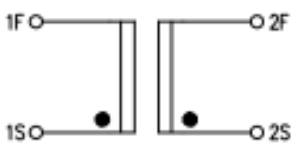
Drawing	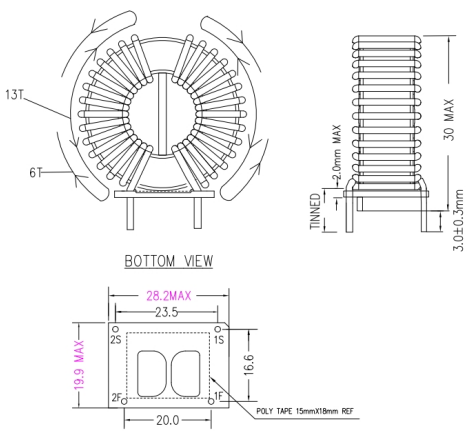	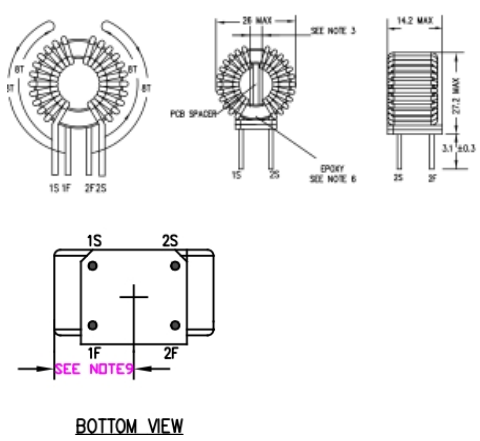

Note: The common mode choke L1000 and L1100 can be placed horizontally.

APPLICATION NOTES

Recommended External EMI Filter

External circuit below is used for input surging protection to meet 1KV differential & 2KV common mode of line transient requirement, and can be included into the EMI circuit.

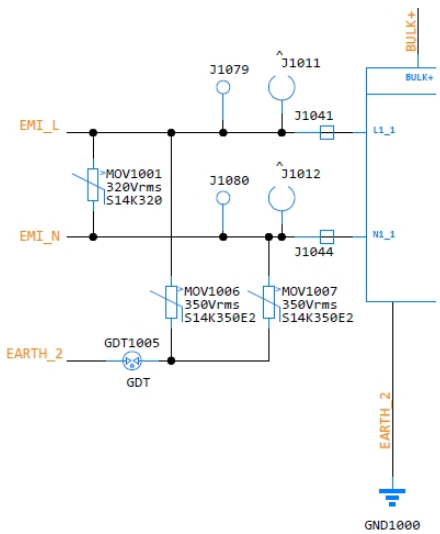

APPLICATION NOTES

Recommended EMC components:

Component	Manufacture	Manufacture P/N
SG1001/SG1000	World Products Inc.	WPSPG-20M 200
GDT1005	Sankosha Corp.	Y08SV-312BTR
MOV1001,MOV1100	Thinking Electronic Industrial Co., Ltd.	TVR20511KSARMCY
MOV1006,MOV1007	Thinking Electronic Industrial Co., Ltd.	TVR14561KSY
C1102	Hua Jung Components Co., Ltd	MKP-105K0305AB1151-P
C1101,C1103	TDK Corporation	CS45-B2GA471K-GKA
C1005	Kemet Electronics Corporation	F863DN684M310ALW0L
C1004	Xiamen Faratronic Co. Ltd.	C42Q2474K90C000
C1002,C1003	Dongguan Walsin Technology Electronics Co., Ltd.	YU1AC472M120DAFD7H
C1000,C1001	Vishay BC components	BFC233868136

Note 1 - To meet Lightning Surge option 2 requirement, please update MOVs configuration as the table below.

MOV1100	MOV1101	MOV1001
2pcs SR471K20ES in parallel, Walsin Technology Corporation	1pcs SR471K20ES, Walsin Technology Corporation	1pcs SR471K20ES, Walsin Technology Corporation

APPLICATION NOTES

Recommended Capacitor for Loading Board

Minimum required capacitor used on the loading board is 20 x 22µF and 3 x 330µF NCC APS-160ETD331MJC5S.

Select an External Bulk Capacitor

The maximum bulk capacitance is 560µF. Recommend 450V 560µF for 504W application. The output capacitor value is determined by the following factors:

1. RMS ripple current
2. Peak-to-peak output ripple voltage
3. Hold-up time
4. Expected lifetime of the capacitor

The default bulk voltage to disable the main is 295V and it is varied with equation below when bulk voltage is between 387V to 405V.

Vmin = 295V + 2.2222 x (Vbulk – 387V)

RMS Ripple Current

The RMS ripple current for the application should be smaller than maximum permissible RMS ripple current. The ripple current for the PFC module can be approximated as

Irms = (Po/ Eff) x 1/sqrt (Vo x Vrms)

where :

Po = output power (W)

Eff = efficiency (%)

Vo = output voltage (V)

Vrms = input rms voltage (V)

This gives the ripple current at 140kHz. The maximum ripple current for capacitors is usually specified at 120Hz. To convert from 140kHz to 120Hz, the Irms figure should be divided by 1.4.

APPLICATION NOTES

Peak to Peak Output Ripple Voltage

The AC input causes a ripple on the output voltage. The size of the ripple is inversely proportional to the size of the capacitor.

Therefore the maximum allowable ripple voltage should be decided in order to calculate the size of capacitor required. This could be calculated using the following equation:

$Co = Po/ (2\pi f \times Eff_pfc \times Vbulk \times Vripple)$

where :

Co = bulk capacitance (F)

Eff_pfc = PFC efficiency (~0.95)

f = input voltage frequency (Hz)

Vbulk = bulk voltage (V)

Vripple = bulk ripple voltage (V)

Hold-Up Time Requirement

The output capacitor value is different for different hold-up time requirements. The minimum capacitance corresponding to the required hold-up time of a system can be calculated as follows:

$Co,min = (2 \times Po \times Thold)/\{\eta[(Vbulk- Vripple)^2 - (Vmin)^2]\}$

Where :

Co,min = minimum bulk capacitance (F)

Po = main output power (W)

Thold = hold up time (sec)

Vbulk = bulk voltage (V)

Vripple = bulk ripple voltage (V)

Vmin = Voltage to turn off main (V)

η = Main efficiency (~0.9)

For example:

To get a 20ms hold up at full load, the $Co,min = (2 \times 504 \times 20 \times 10^{-3}) / \{0.9 \times [(390 - 6.5)^2 - 295^2]\} = 372 \times 10^{-3}$mF, around 370µF.

To get a 30ms hold up at full load, the $Co,min = (2 \times 504 \times 30 \times 10^{-3}) / \{0.9 \times [(390 - 6.5)^2 - 295^2]\} = 559 \times 10^{-3}$mF, around 560µF.

Note:

Bulk voltage and ripple voltage are not fixed. There is dynamic bulk voltage depend on input voltage and output voltage. As the bulk cap tolerance varied with different MPN. The above calculation is for reference only. The actual hold-up time should be measured based on actual operating conditions and bulk cap tolerance should be considered.

The default bulk voltage to disable the main is 295V and it is varied with equation below when bulk voltage is between 387V to 405V.

APPLICATION NOTES

Current Sharing

The AIF42BAC series main output V_O is equipped with current sharing capability. This will allow up to 10 power supplies to be connected in parallel for higher power application. Current share accuracy is typically 10% of the rated current.

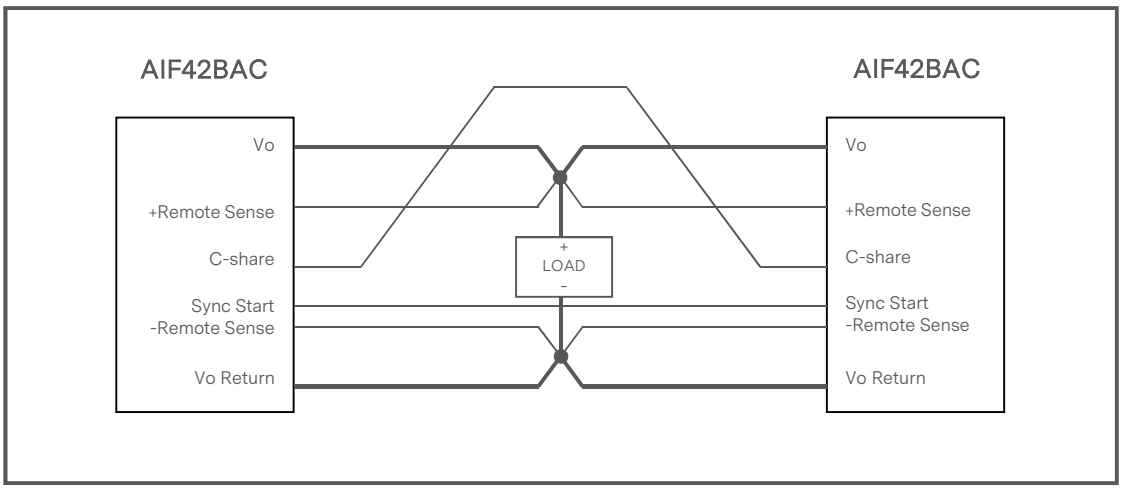

C-share voltage tolerance is ±5% when the output load ≥20% of full load. C-share voltage tolerance is ±0.1V when the output load <20% of the full load.

The C-share voltage level at no load (0A) is 0.32V typ. and at full load (42A) is 5V typ. with linear function. The C-share voltage diagram is shown as below.

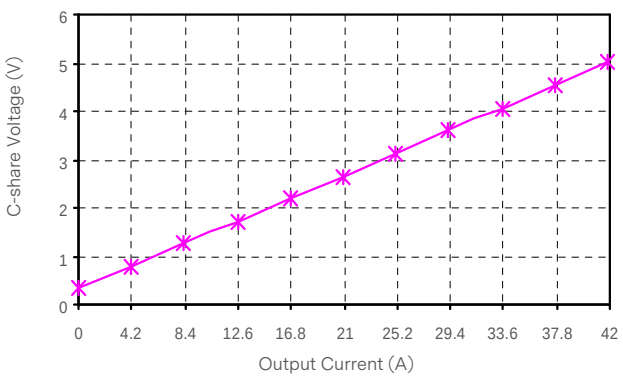

APPLICATION NOTES

1+1 Redundancy Configuration

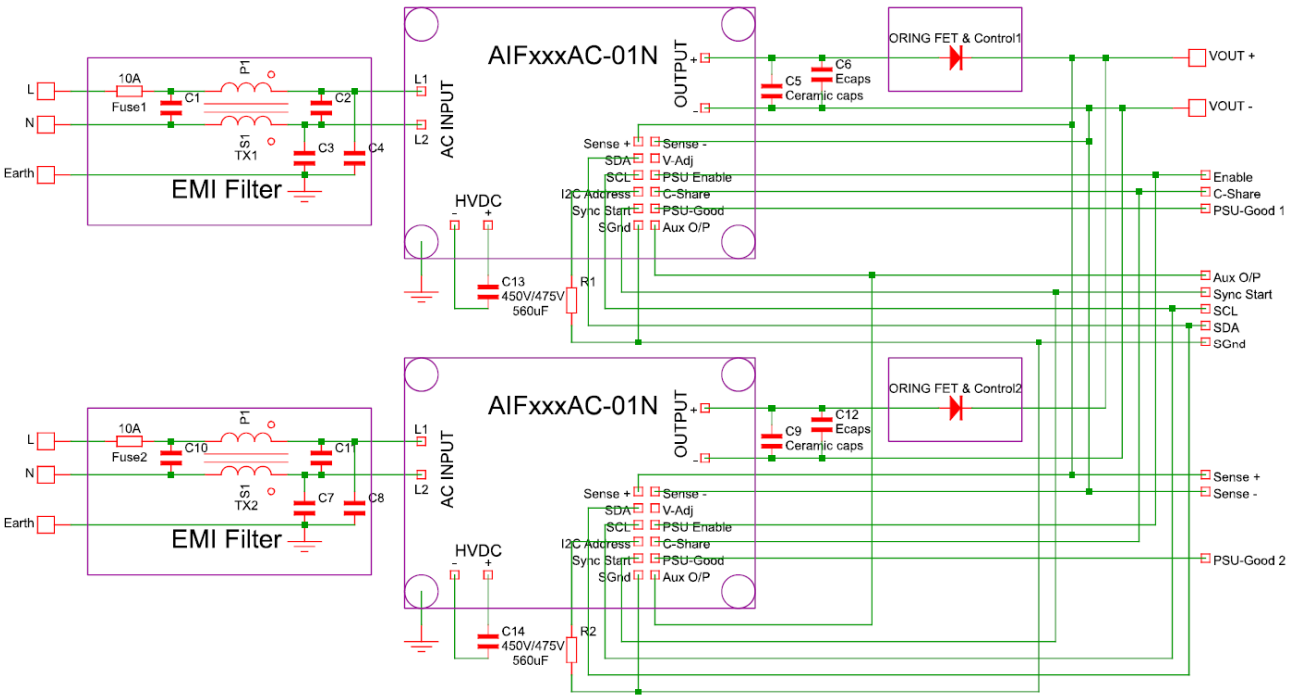

1+1 Common EMI Filter Redundancy Configuration

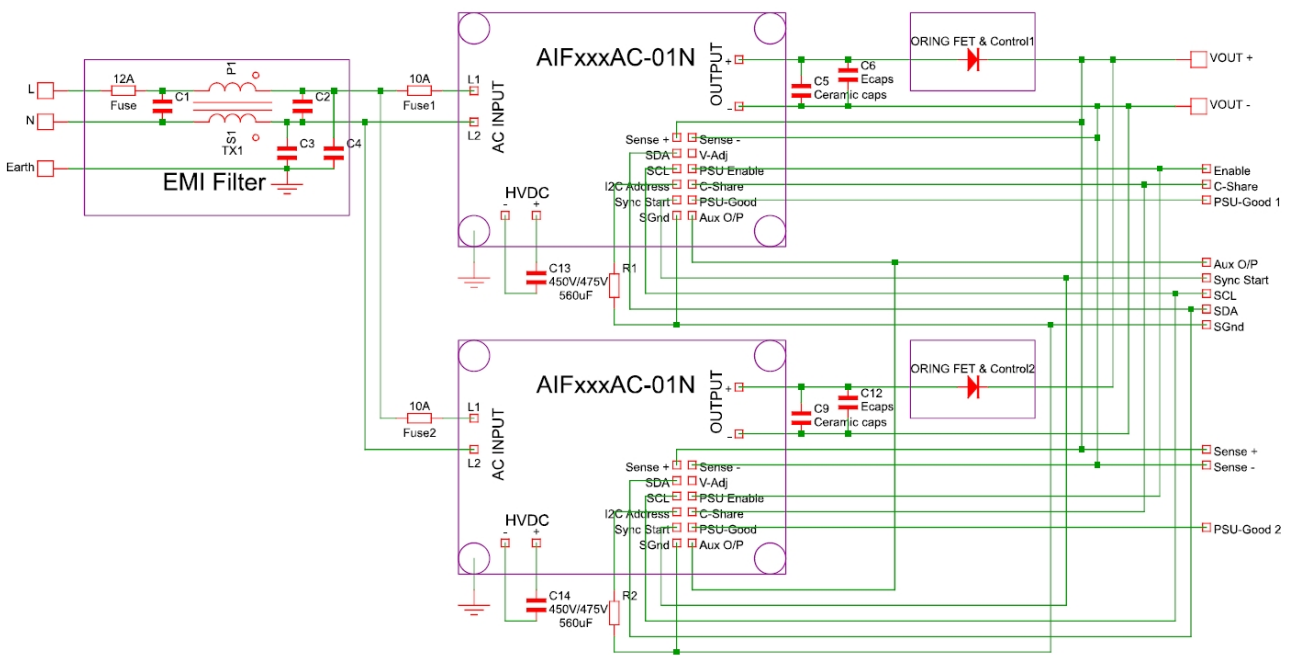

APPLICATION NOTES

N+1 Redundancy Configuration

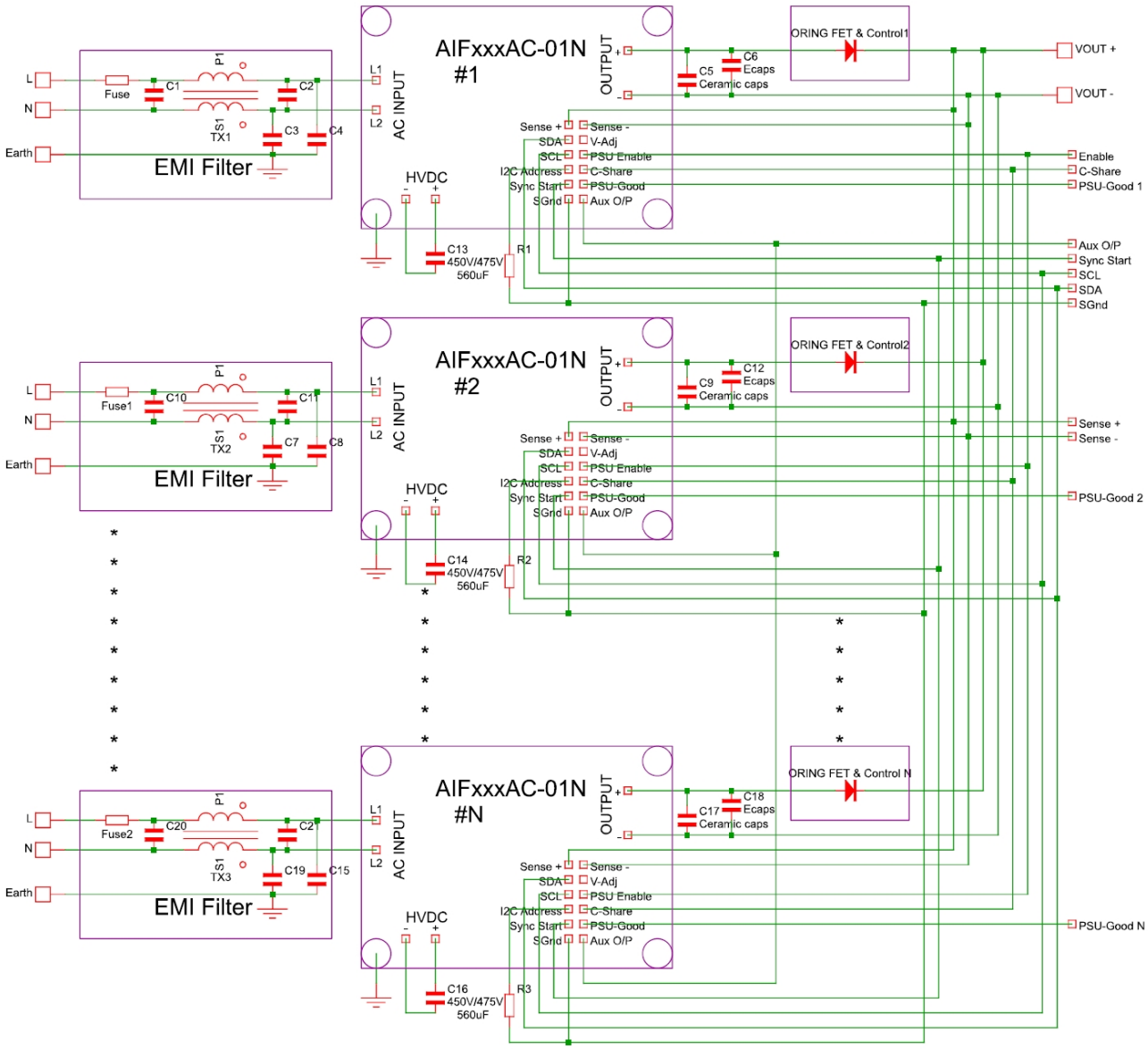

APPLICATION NOTES

2+0 Configuration

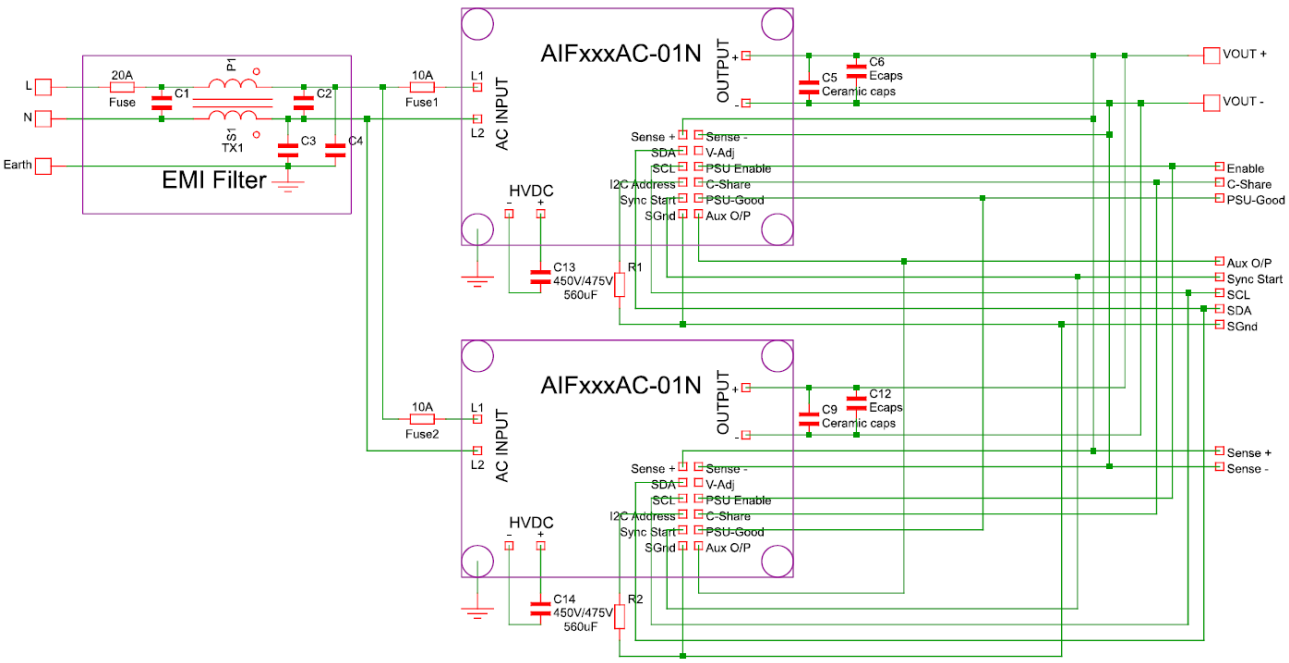

APPLICATION NOTES

Package Information

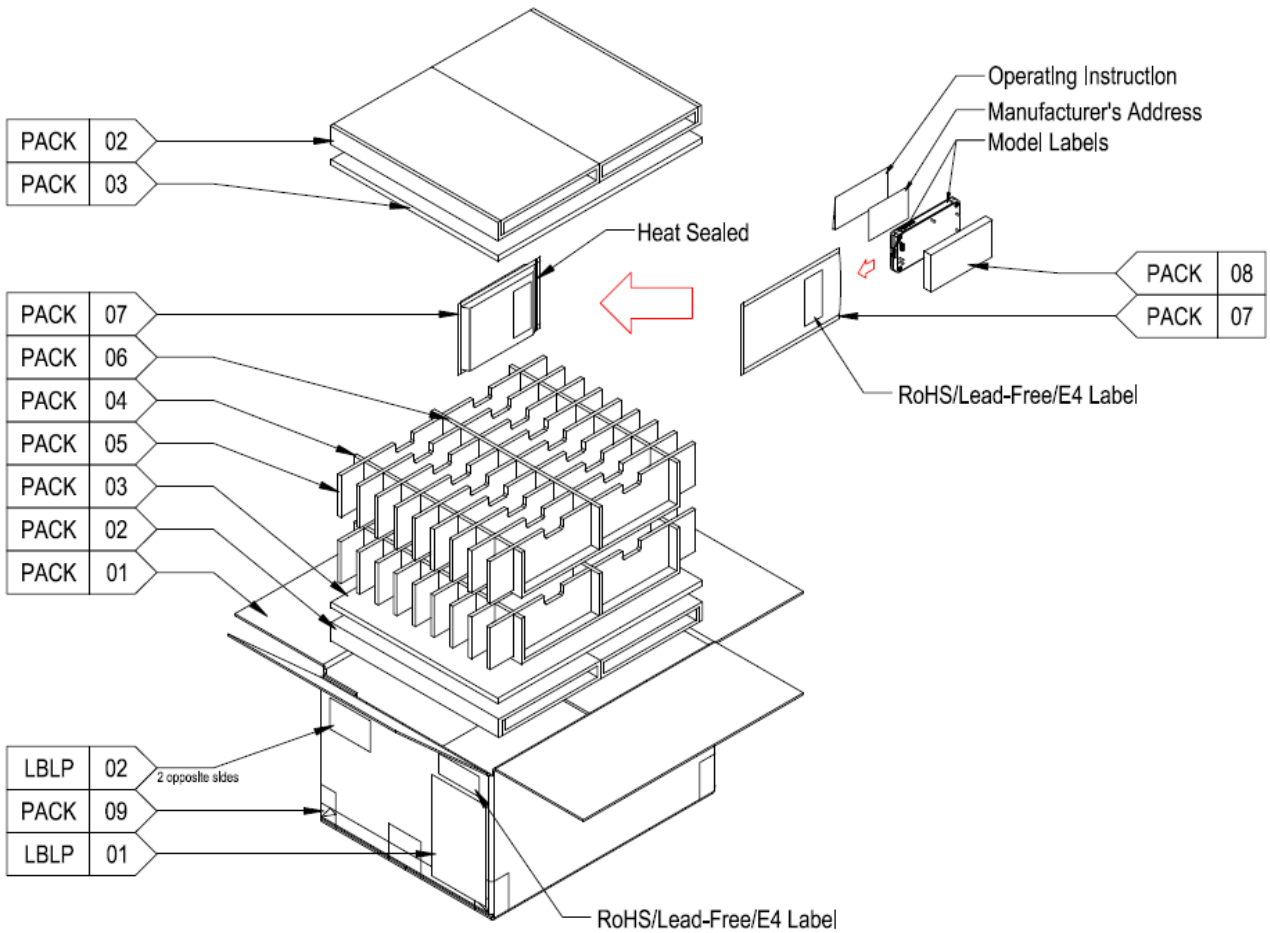

Individual carton details:

1. Outside dimensions of carton box 406 (L) x 335 (W) x 266 (H) mm
2. 32 units per carton box

APPLICATION NOTES

Output Ripple and Noise Measurement

The setup outlined in the diagram below has been used for output voltage ripple and noise measurements on the AIF42BAC-01N series module. When measuring output ripple and noise, a scope jack in parallel with a 0.1µF ceramic chip capacitor, and a 10µF aluminum electrolytic capacitor should be used. Oscilloscope should be set to 20MHz bandwidth for this measurement.

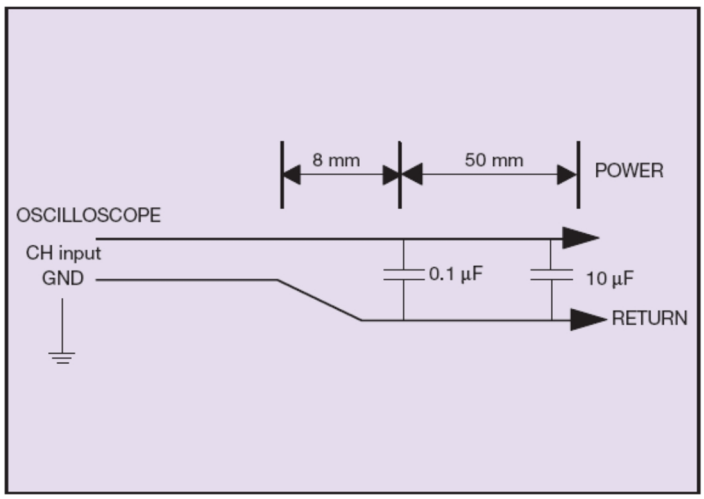

RECORD OF REVISION AND CHANGES

Issue	Date	Description	Originators
1.0	05.21.2021	First Issue	A. Zhang
1.1	04.04.2022	Add performance curve and update some issues from DE	A. Zhang
1.2	04.25.2022	Update order information table	A. Zhang
1.3	07.14.2022	Update 22µF ceramic cap quantity on p.5 Update the definition of HVDC pins C&D Update PSU-good description	A. Zhang
1.4	01.04.2023	Update SCP, C-share, V-adj Update the efficiency curve with DE's data	A. Zhang
1.5	05.26.2023	Update PSU enable description Add the SG1000/1001, GDT1005 MPN for the EMC components	A. Zhang
1.6	07.18.2023	Add the EMC components table, no load input current/power, PSU-Good voltage/current levels	A. Zhang
1.7	10.26.2023	Add L1000 and L1100 mechanical data Align signal pin's name same as real power supply Add bulk voltage in the table 2	A. Zhang
1.8	12.20.2023	Add block diagram of 1+1, 2+0, N+1 applications	A. Zhang
1.9	01.05.2024	Update the leakage current description	A. Zhang
2.0	05.07.2024	Add note on page 2 defines the threaded and non-threaded inserts inside the module	K. Ma
2.1	02.14.2025	Update MTBF to CMTBF Add CMTBF vs Temperature Curve Add typical PF value Update Surge, EMC	A. Zhang
2.2	05.09.2025	Update MOV1001 configuration Add note to short circuit protection Delete the parallel description for model variant 01	A. Zhang
2.3	07.22.2025	Update note for Surge	A. Zhang
2.4	11.14.2026	Add recommended mating connector on page 14 Update fist page picture	A. Zhang

ABOUT ADVANCED ENERGY

Advanced Energy (AE) has devoted more than four decades to perfecting power for its global customers. AE designs and manufactures highly engineered, precision power conversion, measurement and control solutions for mission-critical applications and processes.

Our products enable customer innovation in complex applications for a wide range of industries including semiconductor equipment, industrial, manufacturing, telecommunications, data center computing, and medical. With deep applications know-how and responsive service and support across the globe, we build collaborative partnerships to meet rapid technological developments, propel growth for our customers, and innovate the future of power.

PRECISION | POWER | PERFORMANCE | TRUST

For international contact information,
visit advancedenergy.com.

powersales@aei.com (Sales Support)
productsupport.ep@aei.com (Technical Support)
+1 888 412 7832

Specifications are subject to change without notice. Not responsible for errors or omissions. ©2026 Advanced Energy Industries, Inc. All rights reserved.

AIF42BAC-01N - Rev 11.14.26_#2.4